Next Generation Integrated Power Systems (NGIPS) for the Future Fleet

IEEE Electric Ship Technologies Symposium
Baltimore, MD
April 21, 2009

CAPT Norbert Doerry
Technical Director, Surface Ship Design and Systems Engineering
Naval Sea Systems Command
Norbert.doerry@navy.mil

Agenda

- Vision
- NGIPS Technology Development Roadmap
- NGIPS Architectures
- NGIPS Design Opportunities
- NGIPS Business Model
- Institutionalizing the Electric Warship

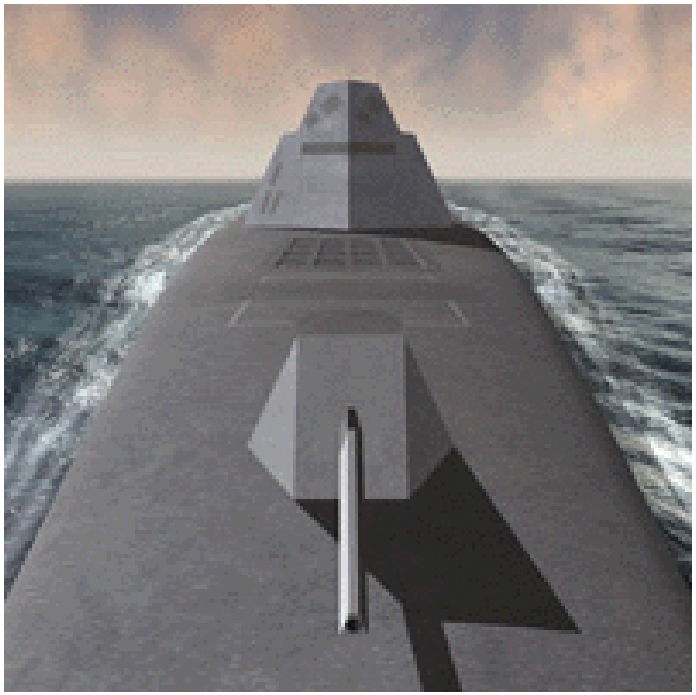

Electric Warship Vision

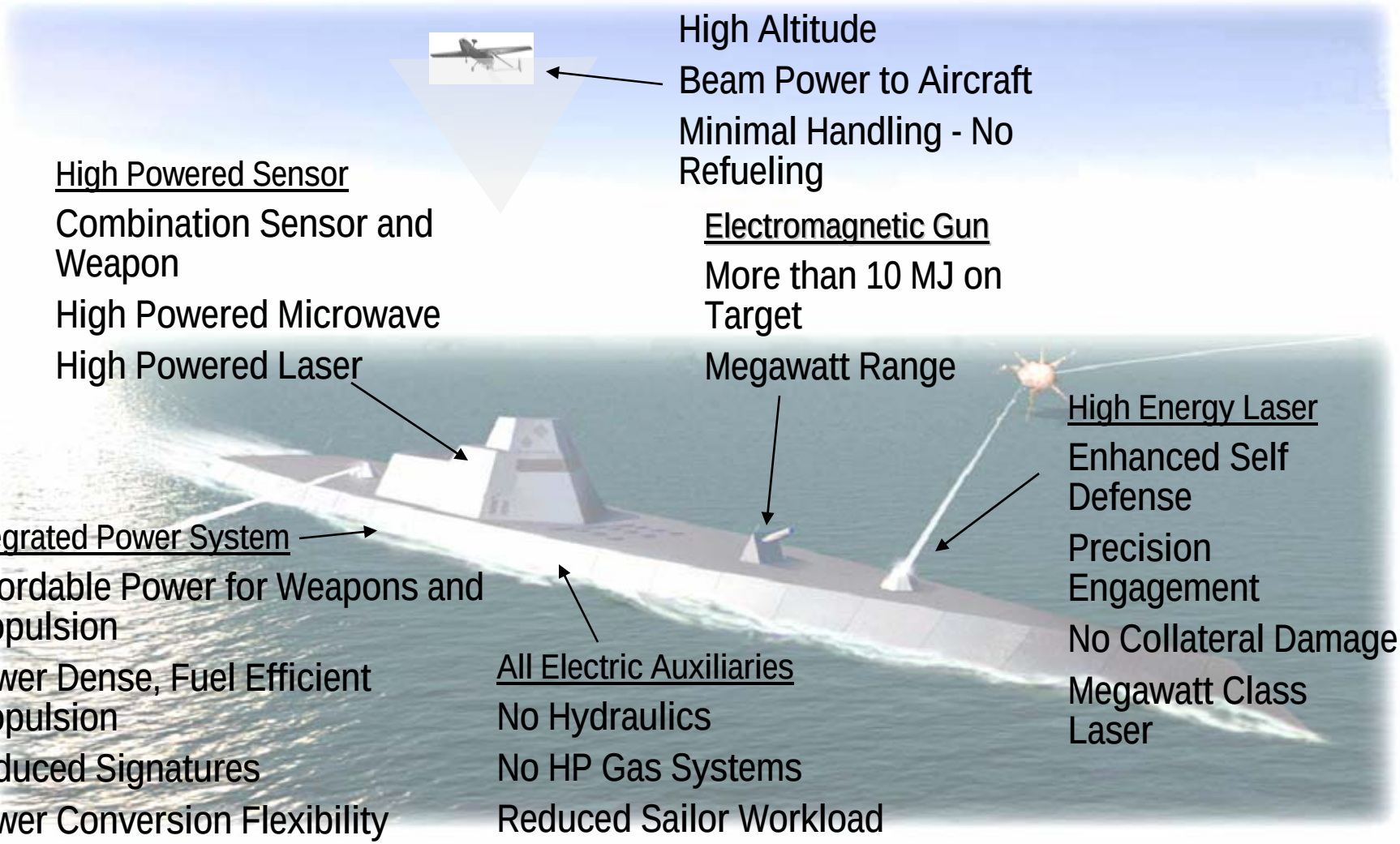

Organic Surveillance Drone

High Altitude

Beam Power to Aircraft

Minimal Handling - No Refueling

High Powered Sensor

Combination Sensor and Weapon

High Powered Microwave

High Powered Laser

Electromagnetic Gun

More than 10 MJ on Target

Megawatt Range

High Energy Laser

Enhanced Self Defense

Precision Engagement

No Collateral Damage

Megawatt Class Laser

Integrated Power System

Affordable Power for Weapons and Propulsion

Power Dense, Fuel Efficient Propulsion

Reduced Signatures

Power Conversion Flexibility

All Electric Auxiliaries

No Hydraulics

No HP Gas Systems

Reduced Sailor Workload

The Road to the Electric Warship

LHD 8
Hybrid Electric Drive

DDG 1000
Military Integrated Power System

CVN 78
High Voltage, High Power Distribution System
Electric Aircraft Launch

T-AKE 1
Commercial Integrated Power System

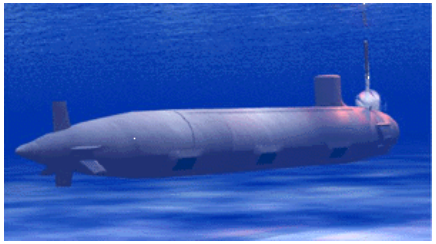

SSN 774
Power Electronics

NGIPS Technology Development Roadmap

<u>Vision</u>: To produce affordable power solutions for future surface combatants, submarines, expeditionary warfare ships, combat logistic ships, maritime prepositioning force ships, and support vessels.

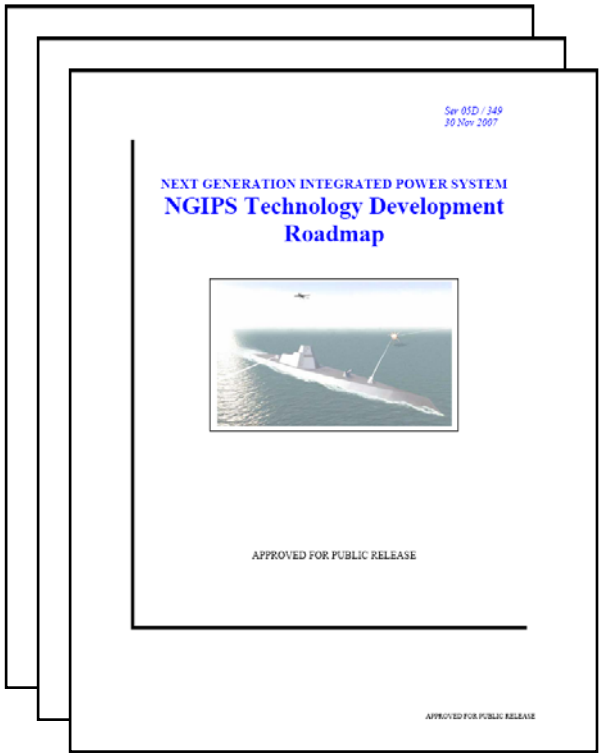

<u>The NGIPS enterprise approach will</u>:

- Improve the power density and affordability of Navy power systems
- Deploy appropriate architectures, systems, and components as they are ready into ship acquisition programs
- Use common elements such as:
  - Zonal Electrical Distribution Systems (ZEDS)
  - Power conversion modules
  - Electric power control modules
- Implement an Open Architecture Business and Technical Model
- Acknowledge MVDC power generation with ZEDS as the Navy's primary challenge for future combatants

NGIPS Technology Development Roadmap

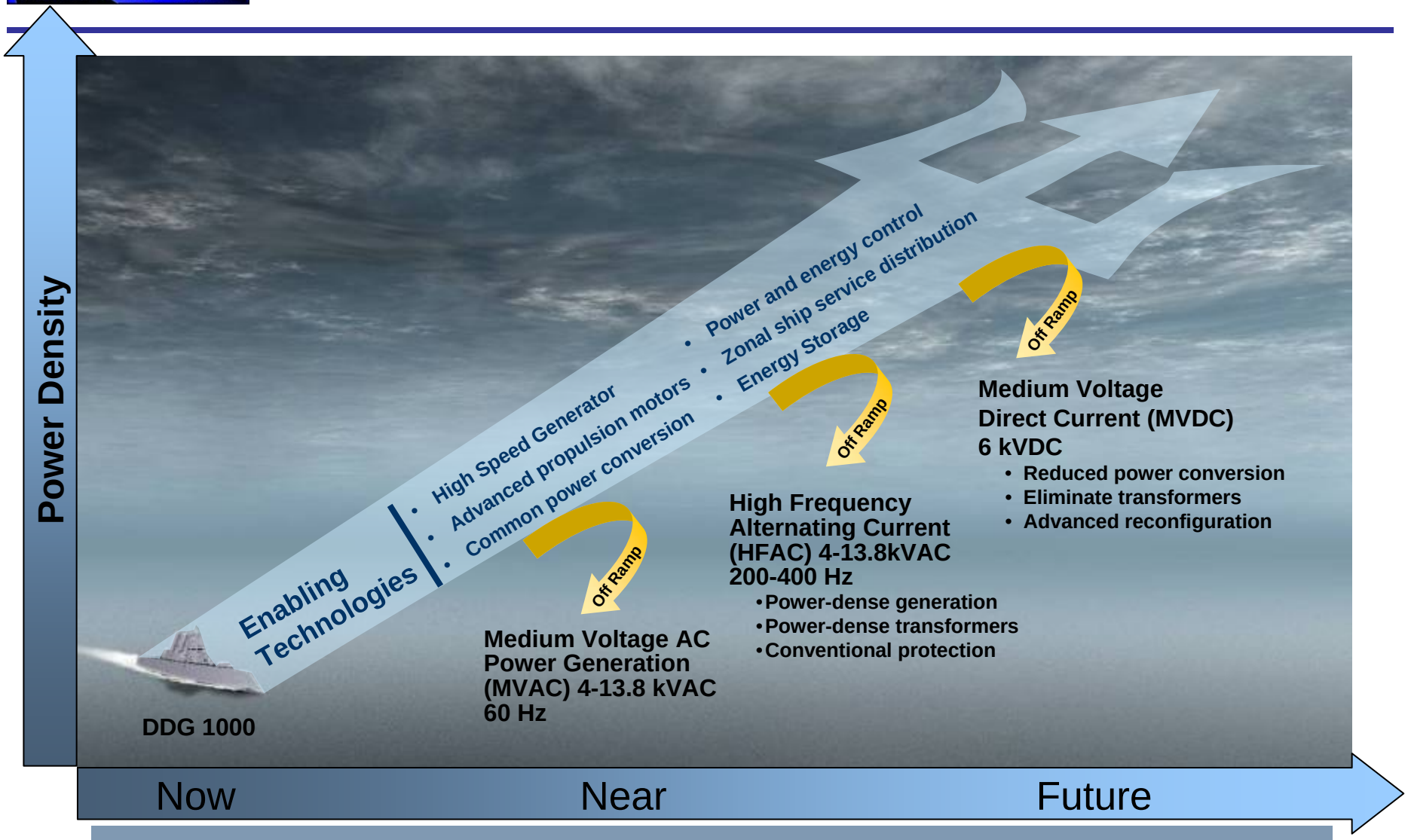

"Directing the Future of Ship's Power"

Power Density Requirements

As ships get bigger, percentage of volume / displacement needed for power and propulsion goes down:

- Ship Resistance scales by the square of the length of a ship
- Ship Volume / Displacement scales by the cube of the length of a ship

Assuming same power density of power system

- For small ship, adding 1 ton of payload requires roughly an additional 9 tons of ship
- For large ship, adding 1 ton of payload only requires roughly an additional 1.2 tons of ship

Reducing power system weight by 1 ton can directly increase payload by 1 ton

- Cost of increased power density more likely offset in a smaller ship.

Guidance

- Below 10,000 ltons, power density has great value.
- Above 25,000 ltons, affordable power systems have great value.

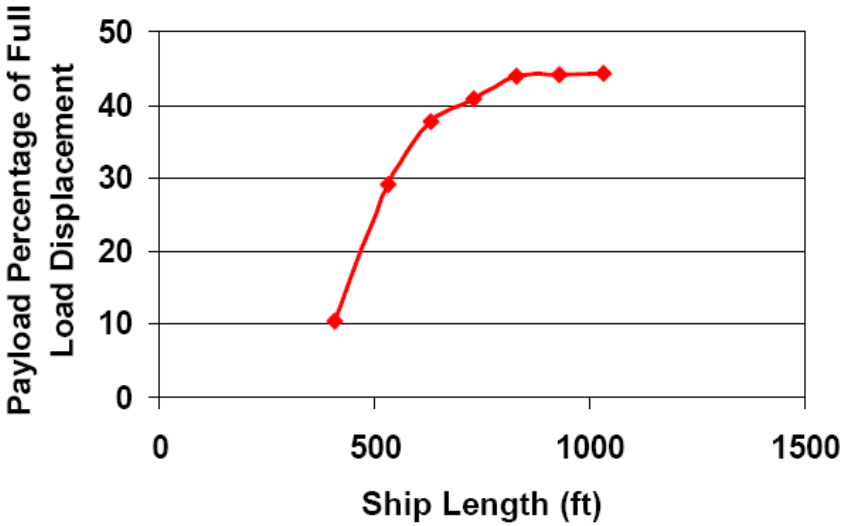

$$R = \tfrac{1}{2}\rho S V^2 \left(C_F + C_R\right)$$

Where:

R	is the ship's resistance or drag
ρ	is the density of saltwater
S	is the wetted surface area
V	is the ship's speed
C_F	is the Frictional Drag Coefficient
C_R	is the Residual Drag Coefficient

Power Density of greatest value to submarines and surface combatants
Power Density not as valuable to large ships / auxiliaries and expeditionary warfare ships

IPS Architecture

- Integrated Power
  - Propulsion and Ship Service Loads provided power from same prime movers
- Zonal Distribution
  - Longitudinal Distribution buses connect prime movers to loads via zonal distribution nodes (switchboards or load centers).

Integrated Power System (IPS)

IPS consists of an architecture and a set of modules which together provide the basis for designing, procuring, and supporting marine power systems applicable over a broad range of ship types:

- Power Generation Module (PGM)
- Propulsion Motor Module (PMM)
- Power Distribution Module (PDM)
- Power Conversion Module (PCM)
- Power Control (PCON)
- Energy Storage Module (ESM)
- Load (PLM)

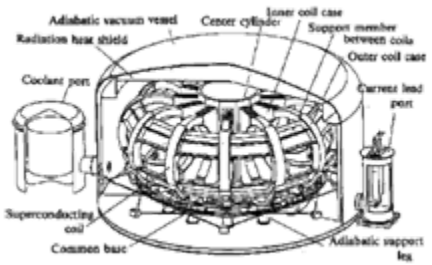

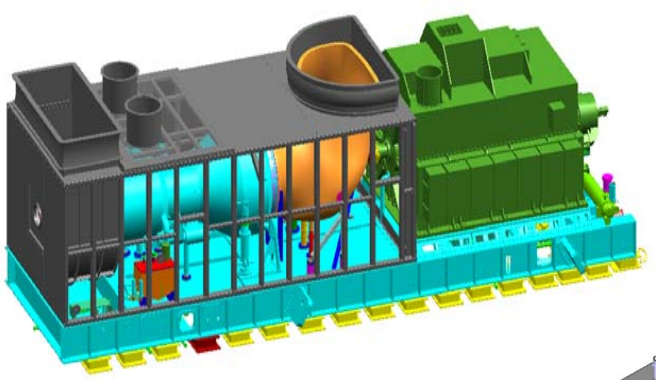

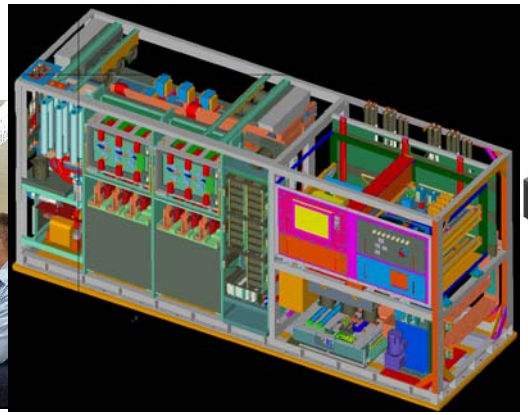

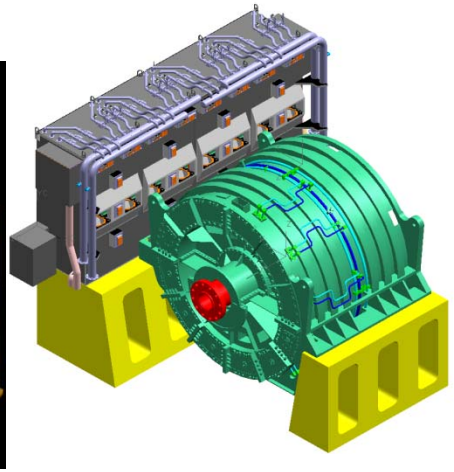

Notional Medium Voltage Architecture

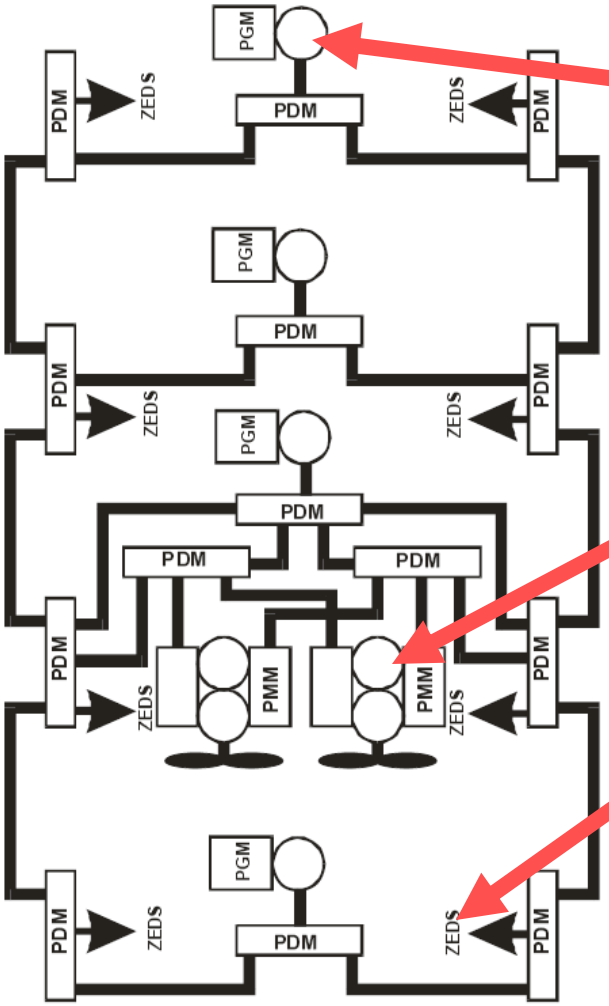

- Power Generation Modules produce Medium Voltage Power (either AC or DC)
- Large Loads (such as Propulsion Motor Modules) interface directly to the Medium Voltage bus
- PCM-1A is interface to in-zone distribution system (ZEDS)
- Control provided by PCON

Location of Energy Storage within Architecture still an open issue

Notional In-Zone Architecture

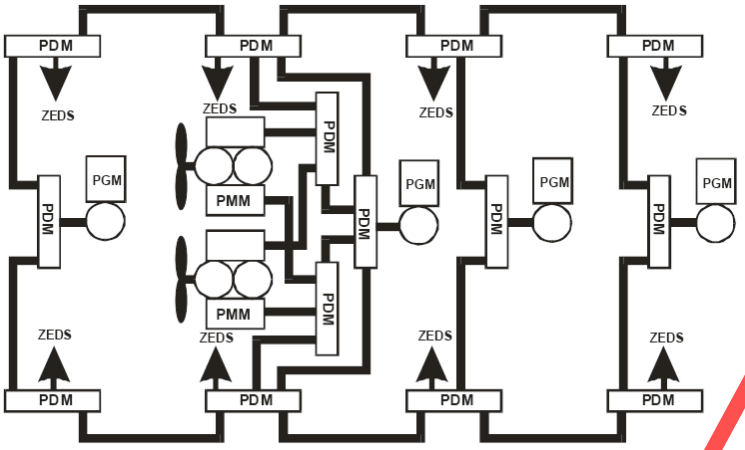

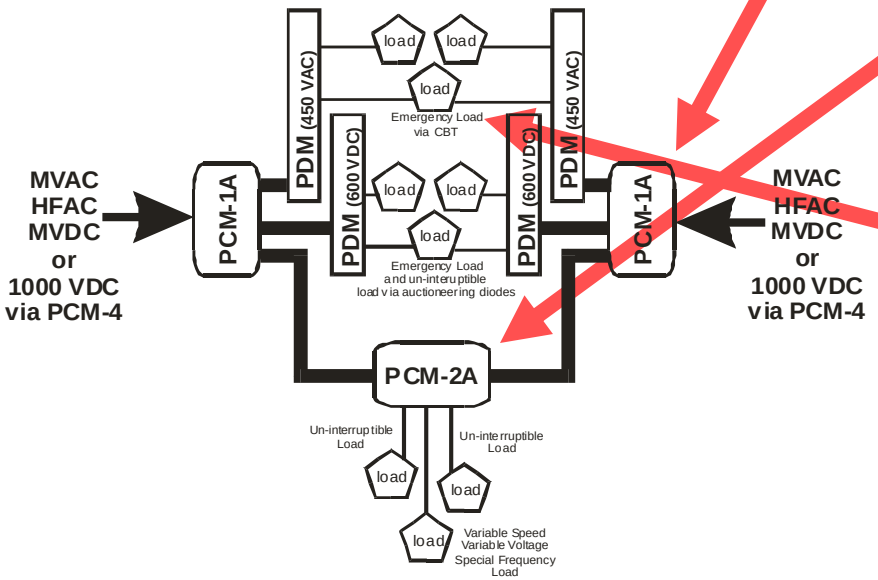

- PCM-1A
  - Protect the longitudinal bus from in-zone faults
  - Convert the power from the longitudinal bus to a voltage and frequency that PCM-2A can use
  - Provide loads with the type of power they need with the requisite survivability and quality of service
- PCM-2A
  - Provide loads with the type of power they need with the requisite survivability and quality of service
  - IPNC (MIL-PRF-32272) can serve as a model
- Controllable Bus Transfer (CBT)
  - Provide two paths of power to loads that require compartment level survivability

Location of Energy Storage within Architecture still an open issue

NGIPS Design Opportunities

- Support High Power Mission Systems
- Reduce Number of Prime Movers
- Improve System Efficiency
- Provide General Arrangements Flexibility
- Improve Ship Producibility
- Facilitate Fuel Cell Integration
- Support Zonal Survivability
- Improve Quality of Service

Support High Power Mission Systems

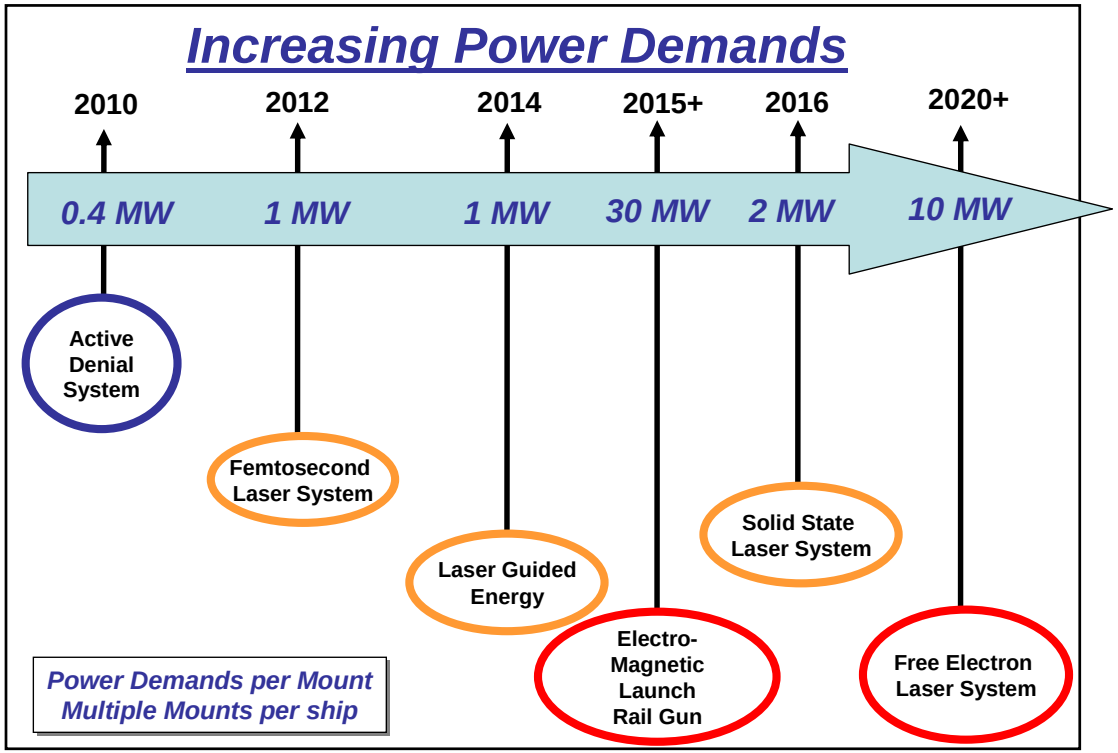

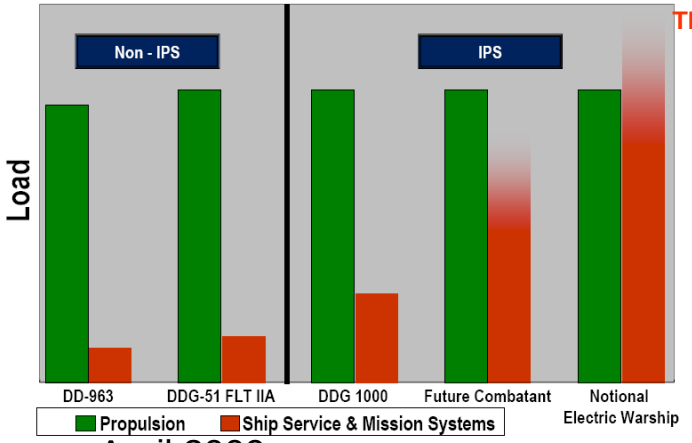

Sensor and Weapons Power Demands will Rival Propulsion Power Demands

Reduce Number of Prime Movers

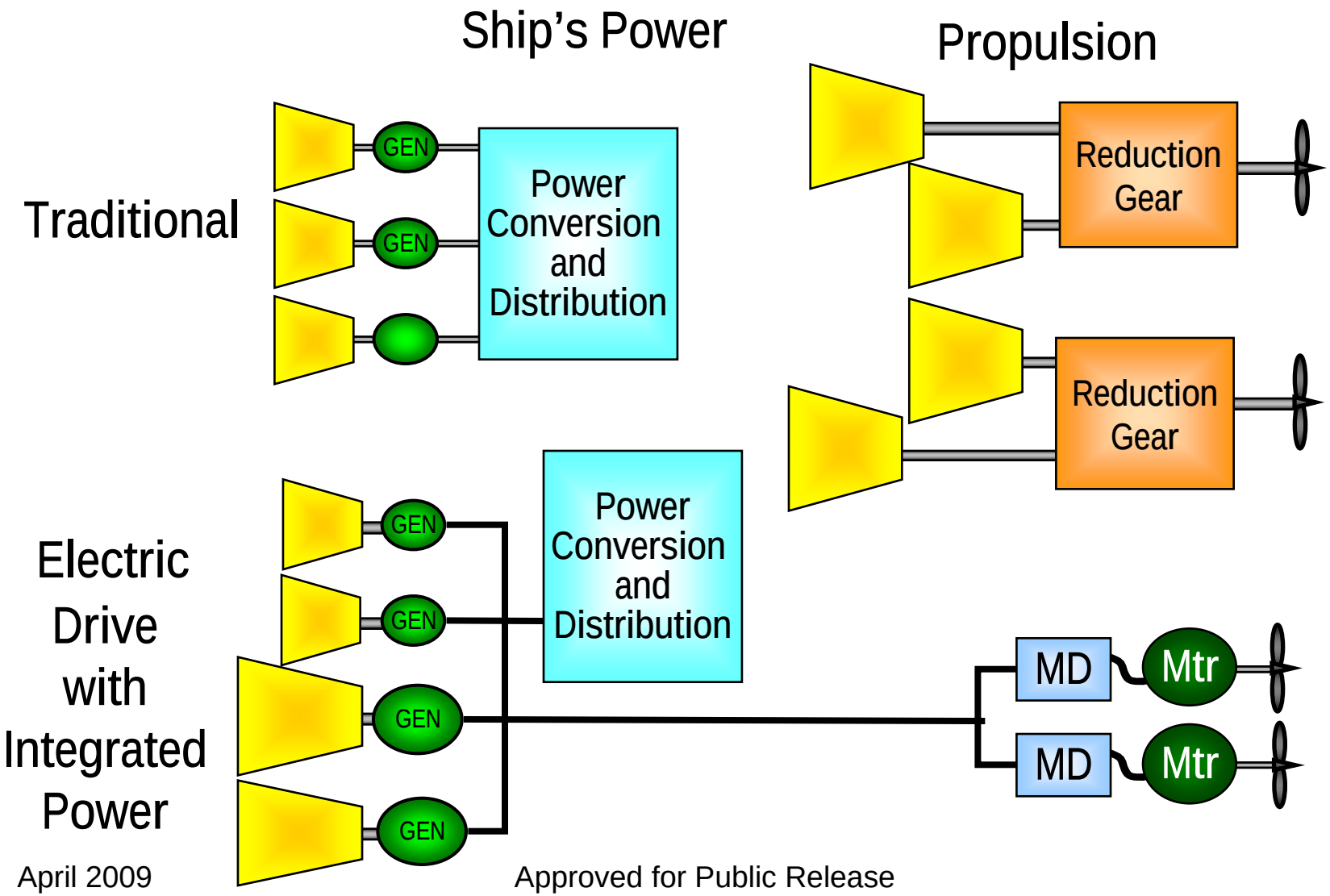

Improve System Efficiency

- A generator, motor drive and motor will generally be less efficient than a reduction gear ….
- But electric drive enables the prime mover and propulsor to be more efficient, as well as reducing drag.

	Mechanical Drive	Electric Drive
Gas Turbine	30%	35%
Reduction Gear	99%	
Generator		96%
Drive		95%
Motor		98%
Propeller	70%	75%
Relative Drag Coefficient	100%	97%
Total	21%	24%
Ratio		116%

Representative values: not universally true

TRADE TRANSMISSION EFFICIENCY TO REDUCE DRAG
AND IMPROVE PRIME MOVER AND PROPELLER EFFICIENCY

Improve System Efficiency: Contra-Rotating Propellers

- Increased Efficiency
  - Recover Swirl Flow
  - 10 – 15% improvement
- Requires special bearings for inner shaft if using common shaft line
- Recent examples feature Pod for aft propeller

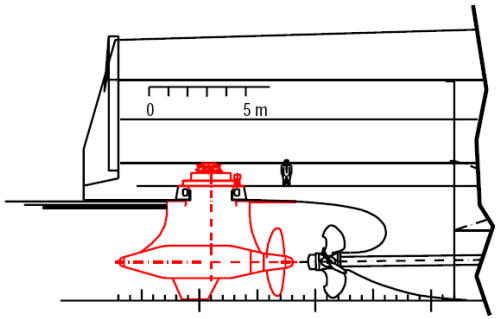

Anders Backlund and Jukka Kuuskoski,

"The Contra Rotating Propeller (CRP) Concept with a Podded Drive"

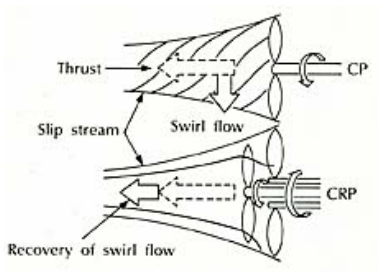

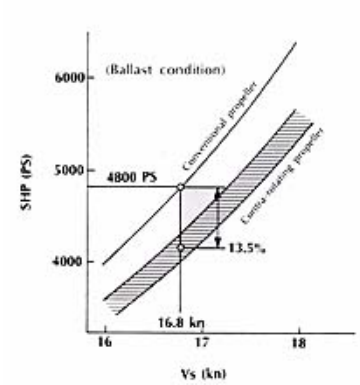

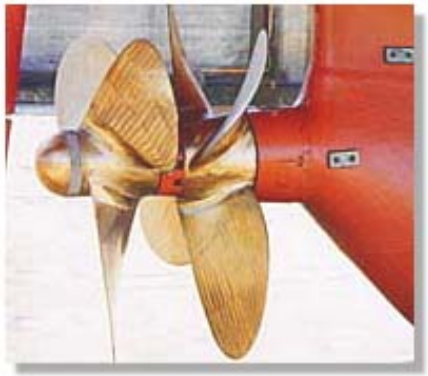

http://www.mhi.co.jp/ship/english/htm/crp01.htm

General Arrangements Flexibility Improve Ship Producibility

- Vertical Stacking of Propulsion Components
- Pods
- Athwart ship Engine Mounting
- Horizontal Engine Foundation
- Engines in Superstructure
- Distributed Propulsion
- Small Engineering Spaces

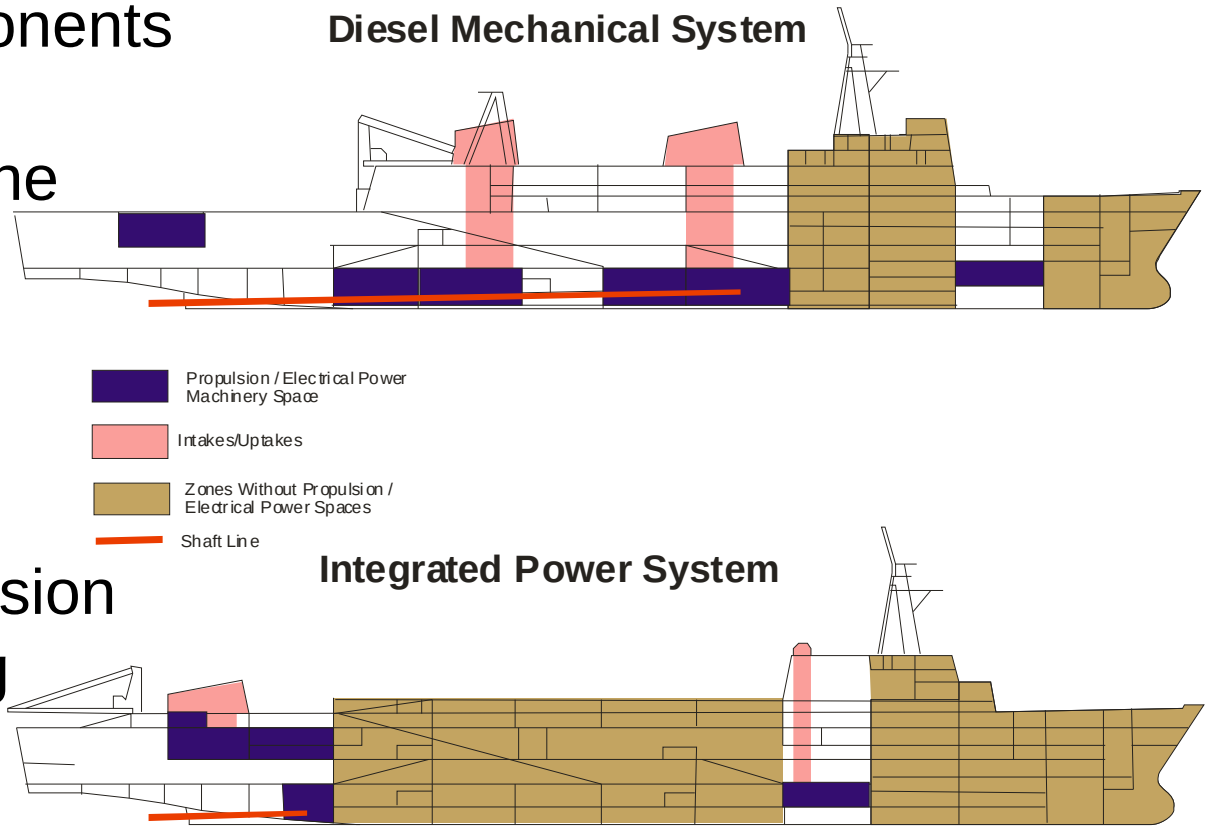

Facilitate Fuel Cell Integration

- Many Advantages
  - Highly Efficient (35-60%)
  - No Dedicated intakes-uptakes; use ventilation
- Challenges
  - Reforming Fuel into Hydrogen – Onboard Chemical Plant.
  - Eliminating Sulfur from fuels.
  - Slow Dynamic Response – Requires Energy storage to balance generation and load
  - Slow Startup – Best used for base-loads

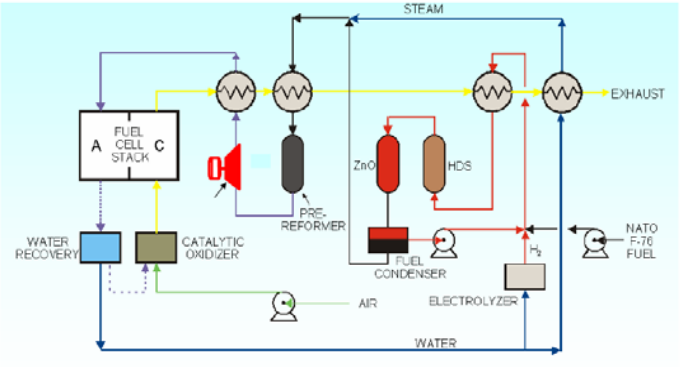

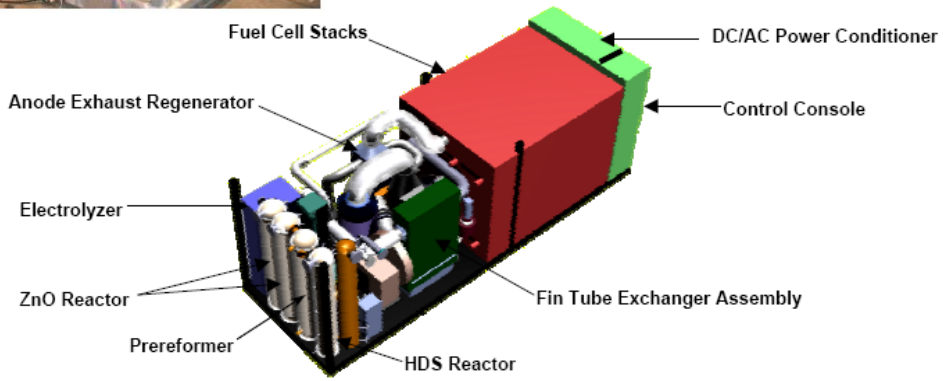

FuelCell Energy 625kW 450V, 3ϕ, 60 HZ, MC SSFC Power System

Zonal Survivability

- Zonal Survivability
  - Zonal Survivability is the ability of the distributed system, when experiencing internal faults due to damage or equipment failure confined to adjacent zones, to ensure loads in undamaged zones do not experience an interruption in service or commodity parameters outside of normal parameters
    - Sometimes only applied to “Vital Loads”

- Compartment Survivability
  - Even though a zone is damaged, some important loads within the damaged zone may survive. For critical non-redundant mission system equipment and loads supporting in-zone damage control efforts, an increase level of survivability beyond zonal survivability is warranted.
  - For these loads, two sources of power should be provided, such that if the load is expected to survive, at least one of the sources of power should also be expected to survive.

SURVIVABILITY DEALS WITH PREVENTING FAULT PROPOGATION AND WITH RESTORATION OF SERVICE UNDER DAMAGE CONDITIONS

Quality of Service

- Quality of Service is a metric of how reliable a distributed system provides its commodity (electricity) to the standards required by its users (loads).
- A failure is any interruption in service, or commodity parameters outside of normal parameters, that results in the load not being capable of performing its function.
  - Interruptions in service shorter than a specified amount for a given load are NOT a failure for QOS calculations.
- For NGIPS, Three time horizons …
  - Uninteruptible loads
    - Interruptions of time t1 – on the order of 2 seconds – are NOT tolerable
  - Short-term interruptible loads
    - Interruptions of time t1 – on the order of 2 seconds – are tolerable
    - Corresponding to fault detection and isolation
  - Long-term interruptible loads
    - Interruptions of time t2 – on the order of 2-5 minutes – are tolerable
    - Corresponding to time for bringing additional power generation on line.

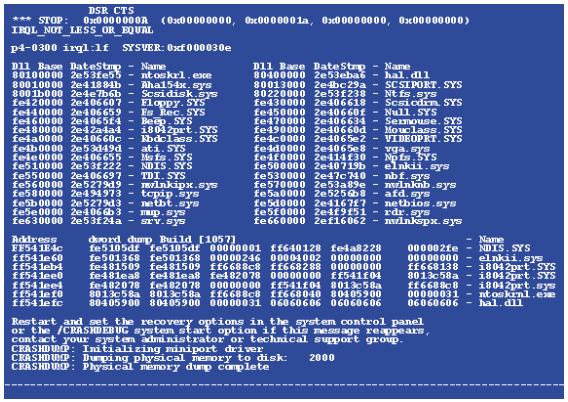

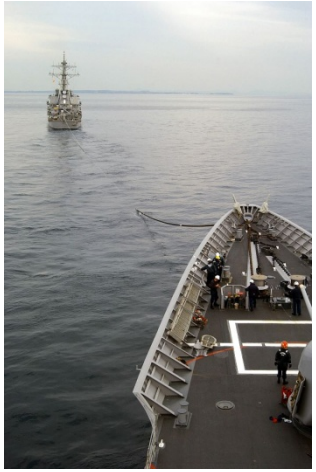

QUALITY OF SERVICE DEALS WITH ENSURING LOADS RECEIVE A RELIABLE SOURCE OF POWER UNDER NORMAL OPERATING CONDITIONS

Open Architecture Business Model

- "Naval Open Architecture (NOA) is the confluence of business and technical practices yielding modular, interoperable systems that adhere to open standards with published interfaces. This approach significantly increases opportunities for innovation and competition, enables reuse of components, facilitates rapid technology insertion, and reduces maintenance constraints. OA delivers increased warfighting capabilities in a shorter time at reduced cost.

CNO Rhumb Lines
December 2006

Open Architecture (OA) Business Model

- Using Performance Specifications that define “what” is needed not “how” it is designed
  - Includes extensive use of well-defined and detailed interface specifications (Technical Architecture)
  - Includes well defined validation methods
- Subdividing labor and specialization at the module or component level
- Defining and segregating roles and responsibilities for component delivery, system integration and life cycle support
- Including a “spiral” peer review process to provide feedback from the evaluation of fielded systems to update architecture documentation and module designs
- Ensures that the designs are published, available to third parties, the Government is enforcing it’s data rights.

Department of Defense Architectural Framework

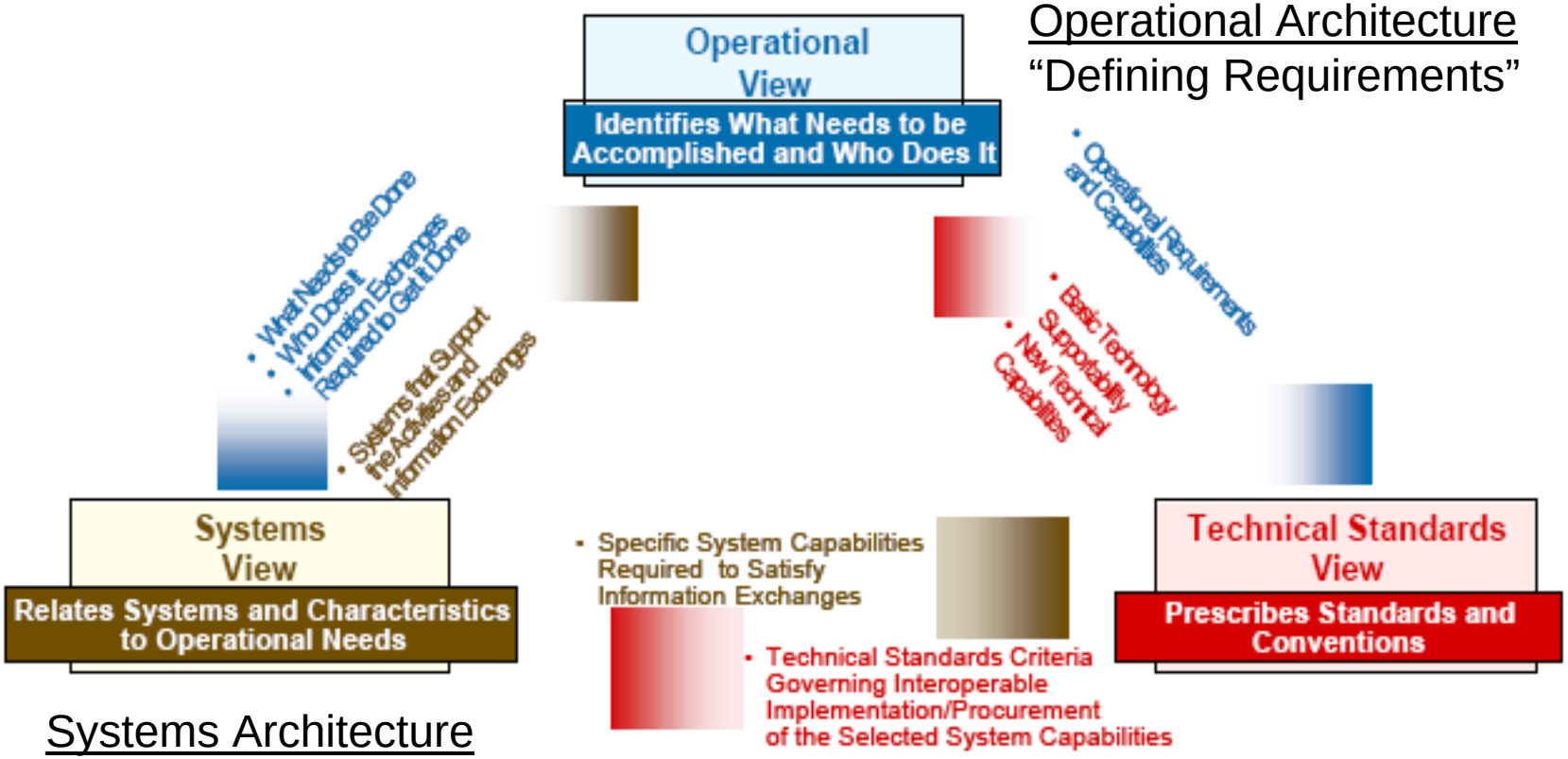

Operational Architecture
"Defining Requirements"

Systems Architecture
"Designing the System"

Technical Architecture
"Defining Standards"

http://www.dod.mil/cio-nii/docs/DoDAF_v1_Volume_I.pdf

NGIPS Business Model Structure

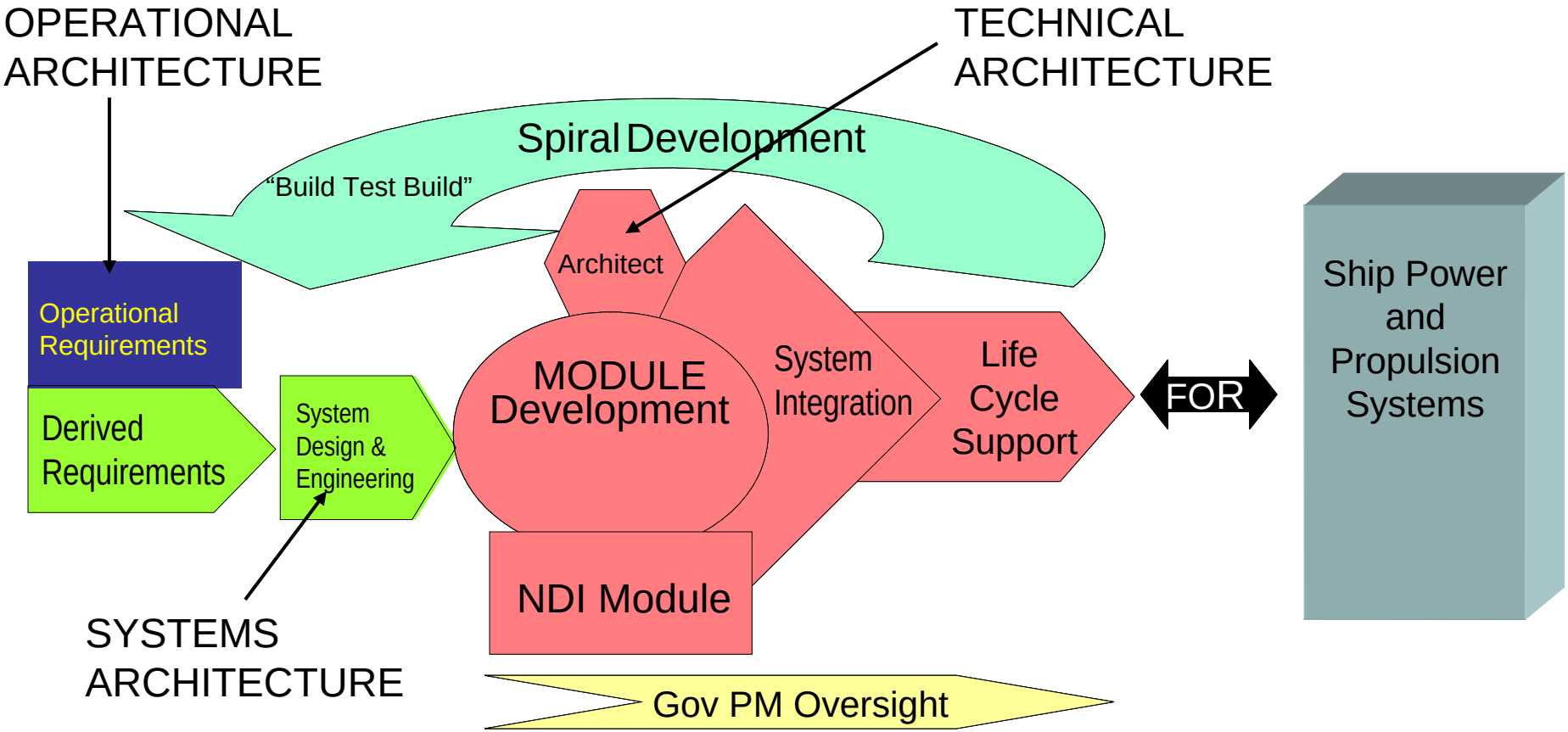

Institutionalizing the Electric Warship

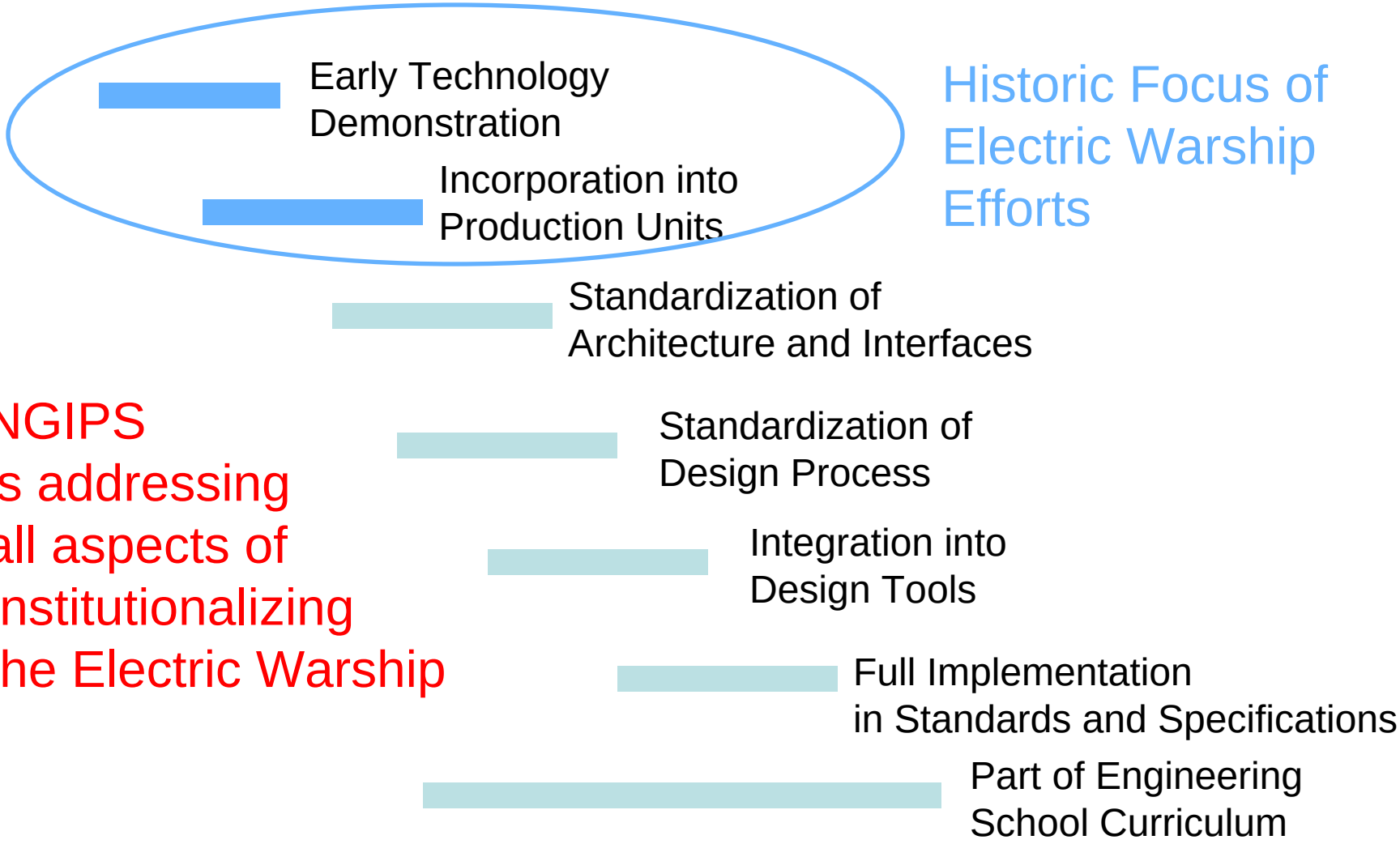

Standards & Specifications

- Naval Vessel Rules
  - Includes provisions for IPS
  - Updated Annually
- MIL-STD-1399 sections 300B and 680
  - Updated/created in 2008
- MIL-PRF-32272 IPNC
  - Model for PCM-2A issued in 2008
- IEEE Standards
  - IEEE Std 45 Electrical Installations on ships – being extensively revised.
  - IEEE Std 1662 Power Electronics on Ships
  - P1676 Control Architecture
  - P1709 MVDC Power on Ships
  - P1713 Electrical Shore-to-ship Connections
- NSRP Ship Production Panel on Electrical Technologies

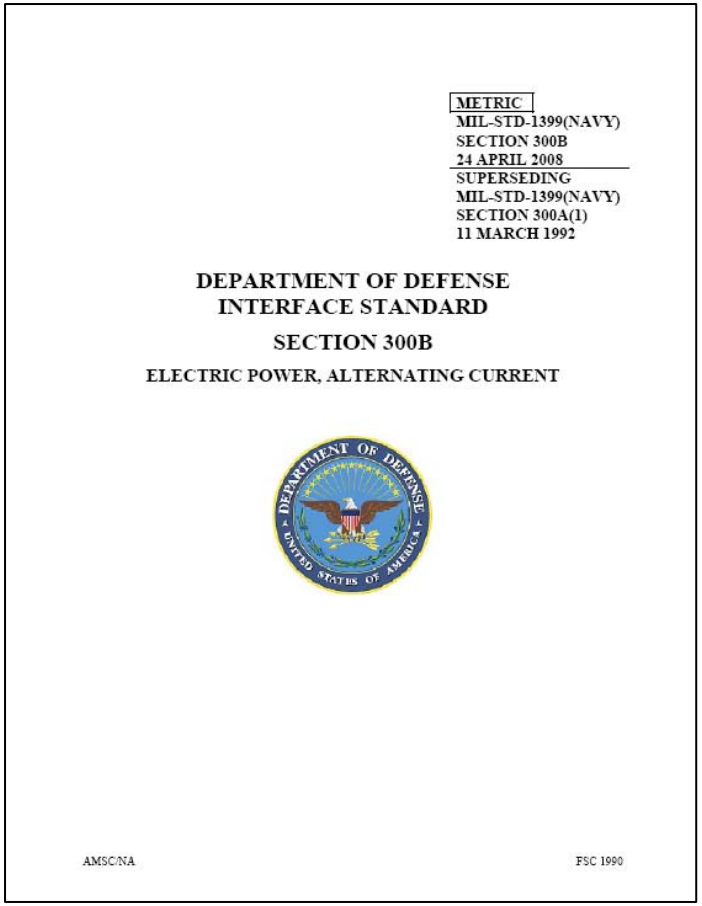

METRIC
MIL-STD-1399(NAVY)
SECTION 300B
24 APRIL 2008
SUPERSEDING
MIL-STD-1399(NAVY)
SECTION 300A(1)
11 MARCH 1992

DEPARTMENT OF DEFENSE
INTERFACE STANDARD

SECTION 300B

ELECTRIC POWER, ALTERNATING CURRENT

AMSC/NA

FSC 1990

Summary

- Vision
- NGIPS Technology Development Roadmap
- NGIPS Architectures
- NGIPS Design Opportunities
- NGIPS Business Model
- Institutionalizing the Electric Warship

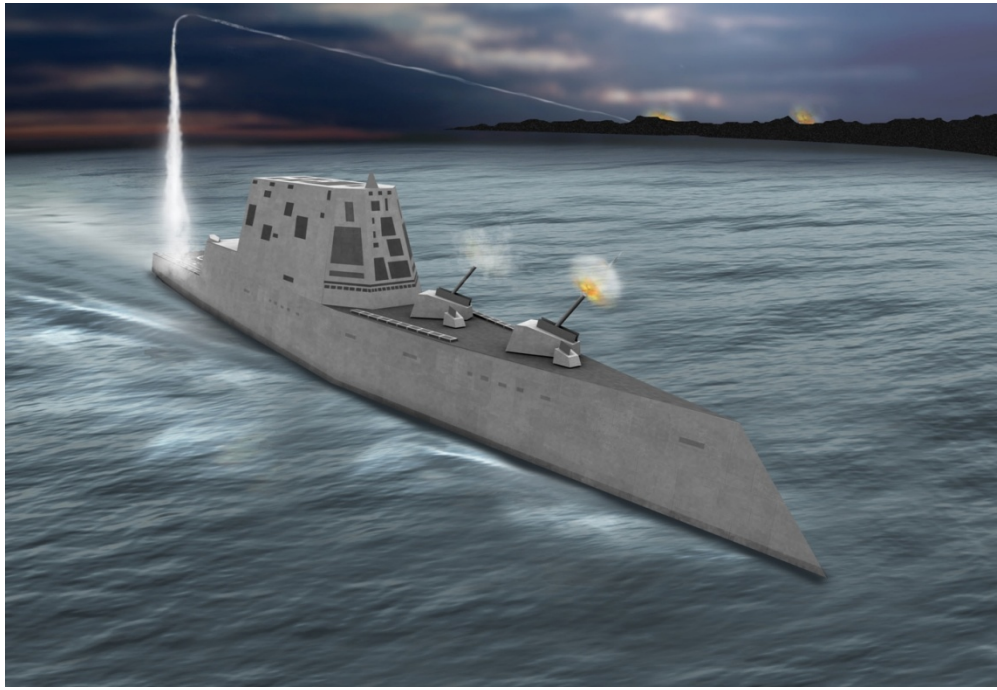

QUESTIONS?