Paper accepted for presentation at 2009 IEEE Bucharest Power Tech Conference, June 28th - July 2nd, Bucharest, Romania

Grid Tied Converter with Virtual Kinetic Storage

M.P.N van Wesenbeeck[1] , S.W.H. de Haan[1], *Senior member, IEEE*, P. Varela[2] and K. Visscher[3], *Senior member IEEE*

Abstract-- The increase of relatively small scale dispersed power generation (DG) is likely to impact the structure and operation of power generation and distribution systems. The current power system comprises multiple generators. Their intrinsic kinetic energy buffer (rotor inertia) plays an important role in short term system stability. Generators that are connected via power electronic power converters lack these kinetic buffers. Optimal power transfer from source to grid is often used as a control objective to optimize the energy yield. At power system level this approach may compromise stability. In this paper it is demonstrated that by emulation of rotor inertia, stability problems on a system level can be mitigated. For that purpose a short-term energy buffer is added to the system that can be controlled at a fast rate, thereby forming a so-called Virtual Synchronous Generator (VSG). Power system stability support then becomes an additional control objective of the DG. Maximum rotor angular speed deviation and maximum critical clearing time are used as performance indicators for the evaluation. Sizing of the short term buffer constitutes a second topic of this paper.

Index Terms—Dispersed power generation, power system stability, micro grid, Virtual Synchronous Generator (VSG).

I. Introduction

DISPERSED power generation (DG) is receiving attention as an alternative or addition to nowadays hierarchical power systems. Large scale integration of small scale power generation can contribute to a more efficient use of natural resources.

A basic requirement for any power system is availability and security of supply. Unscheduled loss of power generation capacity compromises the availability of power. The introduction of a substantial number of dispersed and intermittent power generators however may compromise power system stability [11]. The importance of this topic is reflected in the number of recently published papers 0, [2] [11]. In Fig. 1 a classification of power system stability is shown [6]. Power system stability comprises rotor angle stability, frequency stability and voltage stability. Rotor angle stability is the addressed topic in this paper.

This work is a part of the VSYNC project partially funded by the European Commission under the FP6 framework with the contract No: FP6 – 038584. For further details please see www.vsync.eu.

M.P.N. van Wesenbeeck (m.p.n.vanwesenbeeck@tudelft.nl) and S.W.H. de Haan (s.w.h.dehaan@tudelft.nl) are with Delft University of Technology, The Netherlands.

P. Varela is MSc student from University of Vigo, Spain

K. Visscher (visscher@ecn.nl) is with ECN - Energy research Centre of the Netherlands, The Netherlands.

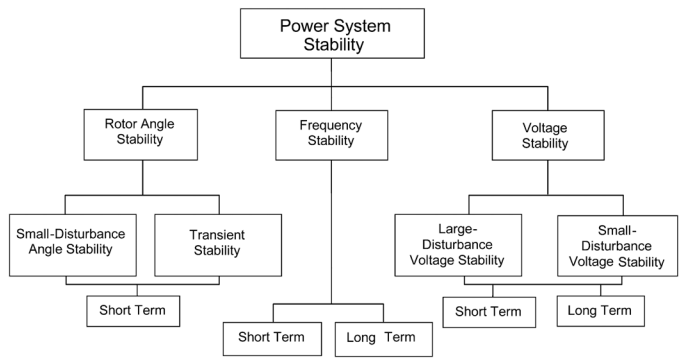

Fig. 1. Classification of power system stability [6]

The great advantage of generators that are connected through power electronics however is their controllability. State-of-the-Art power electronic based DG's employ "yield optimizing" control algorithms or they inject power according to some controlled value. These control algorithms do not address system stability requirements yet. The objective of this paper is to devise, implement and verify a locally implemented control algorithm which enhances rotor angle stability on system level. This algorithm acts on a small energy store that is connected to the converter and is used to emulate the power exchanges between the inertia of a fictitious synchronous generator and the grid, thereby forming a so-called *Virtual Synchronous Generator* (VSG) Furthermore an estimation of the required size for the energy buffer is presented.

II. Problem Statement

A power network comprises a multitude of rotating generators which provide the total required power. The ability of interconnected synchronous machines to remain in synchronism is referred with (power) angle stability. Voltage stability is defined as the ability of a system to maintain acceptable voltages following a system contingency or disturbance [7]. In this paper emphasis is put on rotor angle stability.

Rotating generators are electro-mechanical converters. The interaction between mechanical interface and electrical port is described with the so-called swing equation (1):

$$\frac{d}{dt}\left(\frac{1}{2}J\omega^2\right) = P_m - P_e \qquad (1)$$

978-1-4244-2235-7/09/$25.00 ©2009 IEEE

Here ω is the angular velocity of the rotor, J its moment of inertia, P_m the mechanical power and P_e the electric power. The swing equation expresses that stable operation is only guaranteed if the average accelerating power is zero. Any imbalance between momentary mechanical (shaft) power and absorbed electrical power causes a deviation in steady-state angular rotor speed.

Another important equation is the transmission equation (2):

$$P_e = \frac{EU}{X_{eq}} \sin\delta \tag{2}$$

This equation gives the relationship between the transmitted power P_e through reactance X_{eq} and the phase angle δ between the internal voltage E and the terminal voltage U. This equation denotes the power angle curve of an ideal synchronous machine with non-salient poles.

One of the power generator failure modes is loss of synchronism, which means that the voltages E and U in (2) are no longer synchronized. It induces tripping of a generator and hence loss of power generation capacity. The sudden decrease of available power can trigger an avalanche effect and trip multiple generators causing a collapse of a power system.

III. Power System Past, Present, and Future

Since Tesla introduced the concept of poly-phase ac machines this type of electro-mechanical converter has dominated power network design. Presently electronic based DG's are being introduced in this existing power system. Especially in so-called micro-grid configurations the relative amount of electronic generator power is expected to increase substantially. Micro grids are parts of the grid that are able to operate in islanding mode as well as grid-connected mode so that their grid feeder impedance could be relatively large. The reduction of aggregated inertia per unit of aggregated generating power could compromise short-term stability after contingencies [11].

In the case of total absence of synchronously rotating power generators, for example in uninterrupted power supply configurations [8] or non-terrestrial applications [4], the concept of rotor angle-stability looses its relevancy. In contrast to rotating machinery, overload and short current response are to a large extent programmable. Proper system response e.g. power sharing and response to fault events are solved by localized controls with or without supervisory communication. This paper addresses the so-called *hybrid* power system configuration i.e. power systems with increased contribution of non electro-mechanical power generators.

IV. Modeling

The considered power system comprises an aggregated generator (G), a load, a VSG (Virtual Synchronous Generator) comprising a voltage source converter (VSC), a storage unit and grid connection as shown in Fig. 2.

The first part of this section aims at deriving a small-signal model for the behavior of the rotor angle of the generator. The synthesis of a control structure to stabilize the rotor angle by power control of the VSG is the topic of the second part.

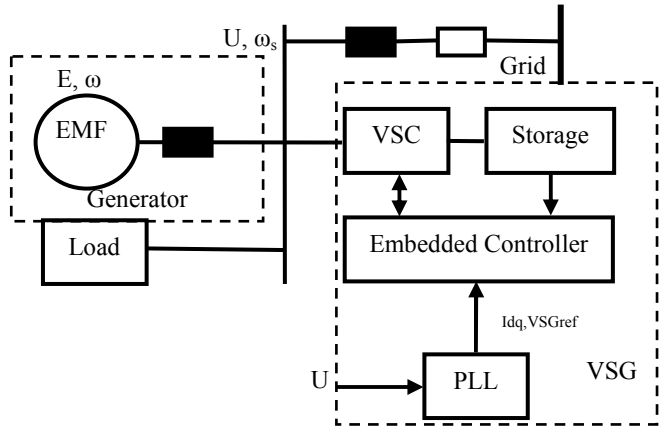

Fig. 2. Investigated Power System

A. Linearized swing equation

The introduced swing equation (1) can be rewritten as:

$$P_m - P_{ea} = \frac{d}{dt}\left(\frac{1}{2}J\omega^2\right) = J\omega\,\frac{d\omega}{dt} \approx \omega_s J\,\frac{d\omega}{dt} \tag{3}$$

Here ω_s is the constant angular velocity of a reference system. The substitution of ω by ω_s is justified for small angular speed excursions. Instead of the inertia J often the so-called inertia constant H is used which is defined by:

$$H = \frac{\frac{1}{2}J\omega^2}{S_b} \tag{4}$$

Here S_b is the nominal apparent power of the generator. Eliminating J results in:

$$\frac{2H_m S_b}{\omega_s}\frac{d\omega}{dt} = P_m - P_e\,. \tag{5}$$

An angular reference frame that moves at constant angular velocity ω_s is defined according to $\theta = \omega_s t + \delta$, where δ is the rotor angle relative to the reference frame. For the difference of the rotor angle speed ω and ω_s we can write:

$$\frac{d\delta}{dt} = \omega - \omega_s \tag{6}$$

Combining (2) and (5) and assuming a system without losses results in:

$$\frac{2H_m S_b}{\omega_s}\frac{d\omega}{dt} = P_m - \frac{EU}{X_{eq}}\sin\delta \tag{7}$$

This non-linear equation can be linearized around the operating point that is characterized by ω_s and δ_0. Small excursions Δ around the operating point are defined by:

$$\omega = \omega_s + \omega_\Delta \qquad \delta = \delta_0 + \delta_\Delta \tag{8}$$

Linearization of sin δ around δ_0 gives:

$$\sin(\delta_0 + \delta_\Delta) = \sin\delta_0 + \cos\delta_0\delta_\Delta + .. \tag{9}$$

By applying (8) and (9) to the set (6) and (7) the following state space equation can be obtained:

$$\frac{d}{dt}\begin{pmatrix}\delta_\Delta\\ \omega_\Delta\end{pmatrix}=\begin{pmatrix}0 & 1\\ -\frac{P_m\cos\delta_0}{S_b}\frac{\omega_b}{2H_m} & 0\end{pmatrix}\begin{pmatrix}\delta_\Delta\\ \omega_\Delta\end{pmatrix} \tag{10}$$

This is a linear approximation for the swing equation for small excursions around a steady-state power angle δ_0. The factor $P_m\cos\delta_0$ in the equation above can be considered as the power that is available to synchronize the system; it is called synchronizing power P_s:

$$P_s = P_m\cos\delta_0 \tag{11}$$

From (10) the natural frequency of the oscillation can be derived, which is expressed with:

$$\omega_{osc}=\sqrt{\frac{\omega_b P_s}{2H_m S_b}}=\sqrt{\frac{\omega_b p_s}{2H_m}} \tag{12}$$

where p_s is the synchronizing power expressed per unit of S_b (pu). The analysis assumed a lossless system. Fortunately in reality damping is provided by mechanical friction and electrical losses in stator, field and damper windings. From the theory of second order systems the system with damping can be expressed by:

$$\frac{d}{dt}\begin{pmatrix}\delta_\Delta\\ \omega_\Delta\end{pmatrix}=\begin{pmatrix}0 & 1\\ -\frac{\omega_b P_s}{2H_m} & -\frac{\omega_b K_{damp}}{2H_m S_b}\end{pmatrix}\begin{pmatrix}\delta_\Delta\\ \omega_\Delta\end{pmatrix} \tag{13}$$

The constant K_{damp} represents the linear damping and is expressed in W/rad.

The solution of this linear set of equations can be expressed as a summation of factors of the types exp(iλt) and exp(λt). The associated Eigen values λ and the relative damping ζ of the system are:

$$\begin{aligned}\lambda_{1,2}&=-\frac{\omega_b K_{damp}}{4H_m S_b}\pm\sqrt{\tfrac{1}{16}\left(\frac{\omega_b K_{damp}}{H_m S_b}\right)^2-\frac{\omega_b p_s}{2H_m}}\\ \lambda_{1,2}&=-\alpha\pm\sqrt{\alpha^2-\omega_{osc}^2}\\ \zeta&=\frac{\alpha}{\omega_{osc}}=\sqrt{\frac{\omega_b}{8H_m p_s}}\cdot\frac{K_{damp}}{S_b}\end{aligned} \tag{14}$$

These parameters give the location of poles of the system.

B. Controller design

In the next part the synthesis of an inertia-emulating control system for the converter is discussed. Inspection of (3) reveals that incorporation of inertia emulation in the controller requires the addition of a derivative or D action into the power controller of the converter:

$$p_{converter}=p_{prim}-K_d\frac{d\omega_\Delta}{dt} \tag{15}$$

The programmed output power comprises two contributions. The primary power transfer of the converter is denoted with P_{prim}. The inertia emulating characteristic is represented by the second term on the right-hand side of (13):

$$K_d=\frac{2H_m S_b}{\omega_s} \tag{16}$$

Using the model of a lossless machine yields a marginally stable solution [10]. Setting the proportional gain of the frequency deviation ω_Δ to a positive value introduces damping:

$$p_{damp}=-K_{damp}\omega_\Delta \tag{17}$$

The proposed power control for the converter power is written with:

$$p_{converter}=P_{prim}-K_d\frac{d\omega}{dt}-K_{damp}\omega_\Delta \tag{18}$$

V. CONTROLLER IMPLEMENTATION

Phase Locked Loops (PLL) are often used to synchronize two periodical processes or to measure frequency. In this paper the PLL is used in a different way and such that the power controller for the converter is part of the phase locked loop. The concept is based on (2) and (7). Eq. (2) indicates that the output power is proportional to sin δ. It will be shown that in the phase locked look there is a signal that is also proportional to sin δ. Inside the loop this signal is used for power control of the converter. The basic structure of the PLL is depicted in Fig. 3. A PLL comprises a phase detector (PH DET), a loop filter (H) and a Voltage Controlled Oscillator (VCO). The phase detector derives a signal proportional to the momentary phase difference of the frequencies ω_s and ω. For a real synchronous generator ω is the frequency of the EMF and ω_s the frequency of the terminal voltage. For a VSG ω is the frequency at the converter side of the filter inductor and ω_s the frequency at the grid side. In Fig. 3b the PLL is shown that is used in this paper. It contains a so-called multiplying phase detector X that is based on a phasor representation of the voltage.

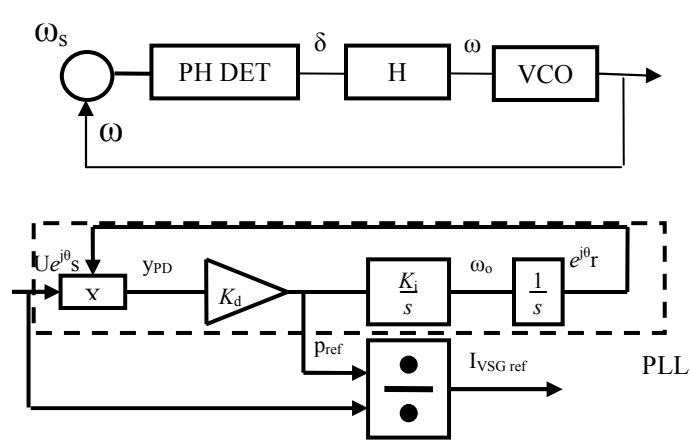

Fig. 3 a) Basic structure of Phase Locked Loop b) PLL that represent a generator and that generates a reference for the VSG current

The output signal y_{pd} of the multiplying phase detector is:

$$y_{pd} = \mathrm{Im}\left\{Ue^{j\phi_s}e^{-j\phi_r}\right\} = U\sin\left(\phi_s - \phi_r\right) = U\sin\delta \tag{19}$$

Where the angles are defined by:

$$\phi_s = \phi_s(0) + \int \omega_s dt \qquad \phi_r = \phi_r(0) + \int \omega_r dt \qquad \delta = \phi_s - \phi_r \tag{20}$$

Eq. (19) shows that the phase detector generates a signal that is proportional to the power of a real generator according to (1).

The loop filter comprises a pure integrator with gain K_i :

$$\frac{d\omega_o}{dt} = K_i \cdot K_d \cdot y_{pd} = K_i \cdot K_d \cdot U\sin\delta \tag{21}$$

Inspection of (7) shows that it has a similar structure as (21), where the mechanical power P_m is chosen to be zero. By choosing proper values for the parameters K_d and K_i the PLL of (21) can be given a similar behavior as the real SM from (7). The result is in full agreement with results from Hiskens [9]. The proper values are:

$$K_d = \frac{E}{X_{eq}} \qquad K_i = \frac{\omega_s}{2H_m S_b} \tag{22}$$

Combining (20), (21) and (22) yields the following expression for the open loop transfer function of the PLL, which is now the same as the transfer function of a synchronous generator as described by (7).

$$\frac{d\delta}{dt} = \omega_s - \omega_r \qquad \frac{d\omega_r}{dt} = K_d \sin\delta \cdot K_i \cdot U = \frac{E}{X_{eq}}\sin\delta\frac{\omega_s}{2H_m S_b}U \tag{23}$$

This equation of the PLL not only gives frequency but also power. The power can be used to derive a set point for the converter control as shown in Fig. 4. Note that the PLL response is identical to that of a synchronous machine without mechanical power input (rotating condenser) and hence is an estimator for its electro-mechanical characteristics. Even the sinusoidal „power-angle'' curve is replicated by the multiplying phase detector characteristic. In addition to the emulation of inertia the PLL provides also the phase angle reference for rotating frame of reference for D-Q control of converter quantities.

This section can be seen as an extension of [14]. Xie analyzed the response of PLL in a Statcom application with added energy storage for active and reactive grid support [14]. Hiskens et al. [9] also address the influence of the PLL dynamics in the control of microgrids. The objective in this paper is the emulation of functional synchronous machine characteristics for enhancement of system stability.

VI. VSG IMPLEMENTATION

A voltage source converter and an energy storage unit as shown in Fig. 4 are employed to implement the virtual synchronous machine functionality.

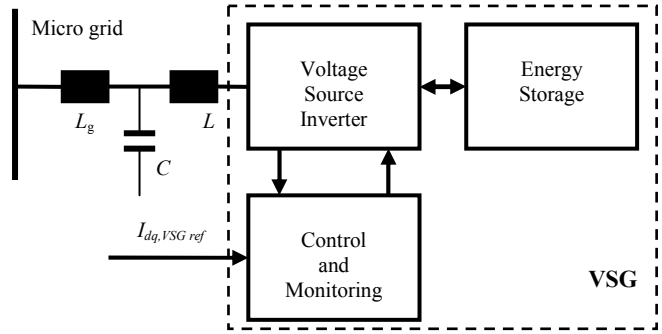

Fig.4 VSG converter implementation.

The Virtual Synchronous Generator (VSG) comprises an energy storage unit connected to a DC link and a Voltage Source Converter (VSC) with LCL grid filter. These types of converters are well studied and documented and widely applied in industrial and maritime applications. Ollila demonstrated the characteristics of this class of grid-tied converters [15]. Blaabjerg et al. disclosed design procedures for choice of component parameters [5]. Their design approach for passive element selection was adopted. Table I lists the calculated component values. The capacitor size for the DC-bus voltage is derived from a commercially available power module.

TABLE I
PASSIVE VSG COMPONENT

Component	Symbol	Value [pu]
Grid-side inductor	L_g	0.0446
Convertor–side inductor	L	0.0268
Filter capacitor	C	0.0277

The Eigen-frequency of the LCL circuit is positioned approximately halfway between power frequency (60 Hz in the USA, Japan and large part of the Americas) and converter switching frequency. A current mode control for grid currents is employed. Current reference templates are provided by the PLL circuit (see Fig. 3). Exchanged active power in d-q frame of reference is expressed with:

$$P_{\mathrm{VSGref}} = \frac{3}{2}\left(u_d i_{d,VSGref} + u_q i_{q,VSGref}\right) \tag{24}$$

For nullified reactive power the required grid currents are expressed with:

$$i_{d,VSGref} = \frac{u_d}{u_d^2 + u_q^2}\frac{2}{3}P \qquad i_{q,VSGref} = \frac{u_q}{u_d^2 + u_q^2}\frac{2}{3}P \tag{25}$$

where u_d and u_q are the observed terminal voltages in VSC D-Q co-ordinates. The embedded current controller replicates the reference currents with high accuracy. The natural

frequency of the electro-mechanical system is low and hence within the bandwidth of the converter control loop [10].

VII. Performance Indicator

The performance of the VSG is evaluated for a small grid as shown in Fig. 2 where a generator is subjected to a grid fault. Proper performance indicators are a prerequisite for the evaluation. In this study maximum angular rotor speed deviation after a three phase (bolted) short-circuit (at the generator terminals) is used as a performance indicator. The performance indicator for rotor angular speed excursions is expressed with:

$$J_\omega = \int t^n \left(\frac{\omega}{\omega_s} - 1 \right)^2 dt \tag{26}$$

The criterion J_ω penalizes both total oscillation time (positive exponent n) and the rotor speed deviation. The exponent n is set to one (1).

VIII. Test Setup and Tests

The test setup is composed of a 250 kVA rated power generator and 250 kVA rated Virtual Synchronous Generator and a load as shown in Fig. 2. The pu base values for power, voltage and time are defined by:

$$S_b = 250 \text{ kVA}$$

$$U_b = 400 \text{ V}$$

$$\omega_b = 2\pi 50 \text{ rad/s}$$

$$t_b = \frac{1}{\omega_b} \text{ s/rad}$$

Generator data are listed in table II:

TABLE II
SYNCHRONOUS MACHINE PARAMETER

Component	Symbol	Value
D-transient impedance	X'_d	0.3 [pu]
Inertia constant	H_m	3.5 [s]

An aggregated resistive load of 1 pu is connected. The inductive grid impedance is set to 0.5 pu. For testing the generator was subjected to grid faults that consisted of short circuits lasting 0.18 seconds close to the generator. The tests were both performed with and without VSG. In Fig. 5 a three phase short circuit with duration of 0.18 sec is applied at time 6 sec. Fig. 5 shows the response of the rotor angle with VSG disabled (a) and VSG enabled (b). Without VSG a significant rotor angle oscillation is observed due to the high impedance of the grid connection (0.5 pu). With VSG the damping is increased considerable, but the magnitude of the excursion is not improved. Ongoing research indicates that the magnitude of the excursion can be reduced by applying reactive power. The results could not be included in this paper yet.

The influence of converter power rating on performance J_ω is investigated. The objective is to identify the cost-benefit relationship. A short-term energy buffer is required to absorb or supply energy. Energy buffer size is related to size, weight and cost. During the first experiment the VSG is disabled. The system reflects a classical power system implementation.

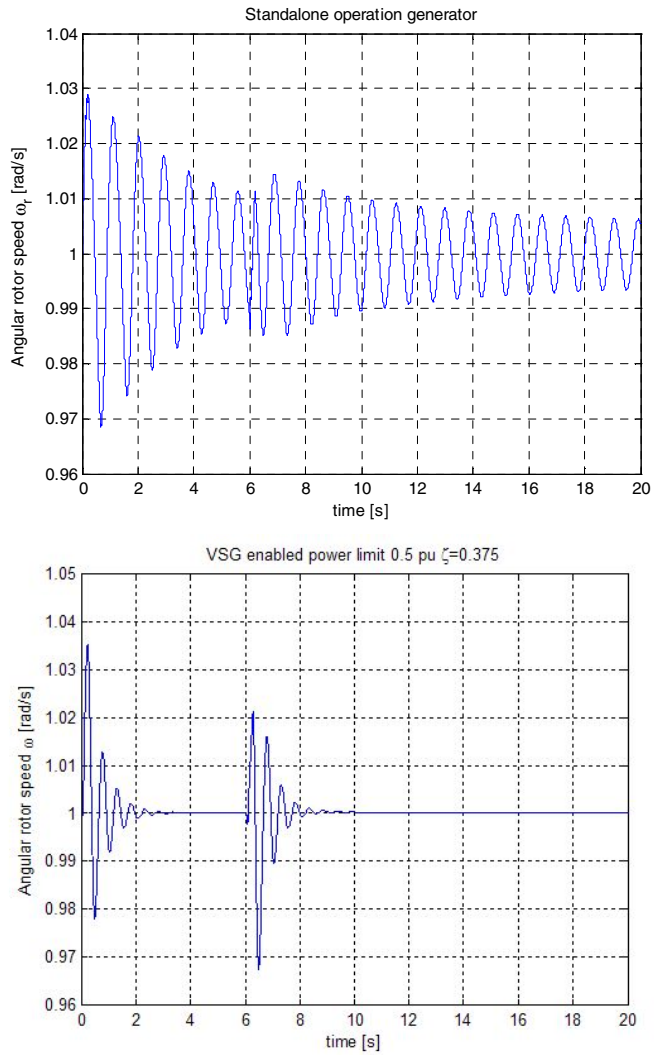

Fig. 5 Rotor angle response to short circuit a) VSG is disabled b) VSG enabled with P_{VSG}=0.5 (pu).

Performance criterion (26) was evaluated and the results are depicted in Fig. 6.

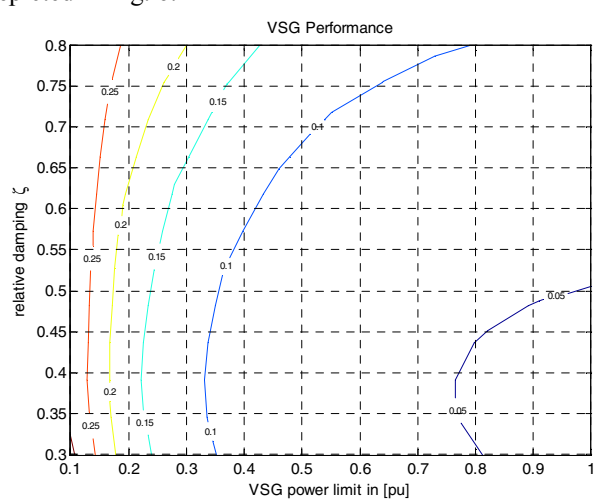

Fig. 6 VSG performance map.

The maximum VSG power is varied from 0.1 to 1 pu (x-axis) and the relative damping ζ parameter ranges from 0.3 to 0.7 (y-axis). Indicated in the figure are a set of iso-performance curves. The performance of a power system without VSG is chosen to be unity (1). Selection of relative damping values ζ of approx. 0.38 results in optimal performance.

An increase in available VSG power budget proportionally improves performance. The rate of improvement however decreases for higher power ratings. It appears that the converter power budget can be restricted without significant performance consequences. Fig. 7 illustrates this.

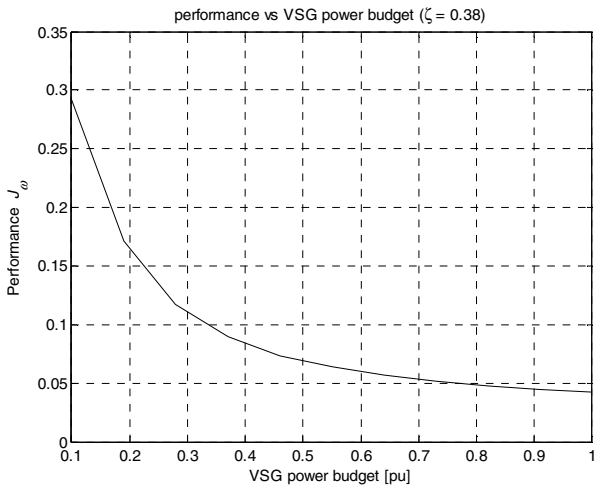

Fig. 7 Performance (pu) as function of available power budget

A doubling in available VSG power rating from 0.5 to 1pu yields only a performance increase of 1.75.

The energy storage requirement is graphically depicted in Fig. 8. The indicated iso-energy curves are represented in pu.

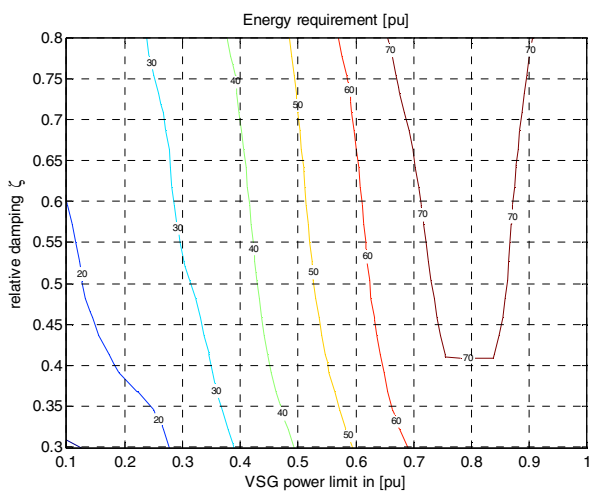

Fig. 8 Energy storage requirement in pu

For each VSG power limit and energy buffer size the graph gives the relative damping. The maximum amount of exchanged energy and hence energy buffer size is increasing with the VSG power budget. Commercially available VSC power modules employ an aggregated DC bus capacitance of approx. 4 pu. There the minimal stored energy in the DC link under rated operating conditions is approx 4 pu. Consequently double layer or ultra-capacitors are candidates for the implementation of the storage function to mitigate rotor angle instability.

In conclusion the following observations are made:

- The introduction of a Virtual Synchronous Generator improves rotor angle stability,
- Inertia emulation is achieved by proper choice of control parameters of a PLL,
- Rotor speed excursions can be significantly damped without extensive VSG power budget penalty,
- Double layer or ultra-capacitors provide a solution for the short-term energy buffer.

During the investigation the major influence of short term voltage stability became apparent. The emulation of inertia improves the rotor speed deviation performance considerable but does not contribute to an improvement of post short-circuit system voltage response. The beneficial effects on system response of enhanced AVR characteristics have been discussed for generators [10]. The short term voltage response issue in relation to the VSG is topic of further research.

IX. References

Periodicals:

[1] A. Azmy and I. Erlich, 'Impact of Distributed Generation on the Stability of Electrical Power Systems,' *IEEE Trans. on Power Delivery, Vol. 20, April 2005, pp.1051-1058.*

[2] K. Visscher and S. W.H. de Haan 'Virtual Synchronous Machines (VSG's) For Frequency Stabilisation In Future Grids With A Significant Share Of Decentralized Generation', *CIRED Seminar 2008, Frankfurt, 23 - 24 June 2008.*

[3] Thong Vu, Van, D. van Dommelen, J. Driesen and R. Belmans, 'Using Dynamic Simulation to Study the Penetration level of Distributed Energy Resources', *Power Tech IEEE Russia, pp. 1-6 2005.*

[4] F. Tsai and F. Lee., 'High-Frequency AC Power Distribution in Space Station', *IEEE Transactions on Aerospace and Electronic Systems, Vol. 26 No 2. 1990.*

[5] M. Liserre, F. Blaabjerg and S. Hansen, 'Design and Control of an LCL-filter based Three-phase Active Rectifier', *IEEE Transactions on Ind. Appl., Vol.41, No 5, 2005, pp,1281-1291.*

[6] P. Kundur, J. Paserba, V. Ajjarapu, G. Andersson, A. Bose, C. Canizares,N. Hatziargyriou, D. Hill, A. Stankovic, C. Taylor, T. Van Cutsem and V. Vittal, 'Definition and Classification of Power System Stability', IEEE/CIGRE joint task force on stability terms and definitions, *IEEE Transactions on Power Systems, Vol. 19, Issue 3, pp. 1387-1401, August 2004*

[7] T. Van Cutsem, 'Voltage instability: Phenomenon, countermeasures and analysis methods', *Proc. IEEE, vol. 88, pp. 208–227, 2000.*

[8] M.C. Chandorkar and D.M. Divan and B. Banerjee, "Control of distributed UPS systems," in *Rec. of PESC 1994,* pp. 197-204 Vol. II

[9] I. Hiskens and E. Fleming, 'Control of inverter-connected sources in autonomous microgrids,' *Proc. American Control Conference, pp. 586-590, 2008*

Books:

[10] P. Anderson and A. Fouad, '*Power System Control and Stability*', second Edition 2003.

Dissertations:

[11] K. de Brabandere, 'Voltage and Frequency Droop Control in Low Voltage Grids by Distributed Generators with Inverter Front-End', PhD Thesis, Catholic University Leuven,2006.

[12] M. Reza, 'Stability analysis of transmission systems with high penetration of distributed generation', PhD thesis Delft University of Technology, 2006.

[13] R..den Dulk, 'An Approach to Systematic Phase-Lock Loop Design', PhD thesis Delft University of Technology, 1989.

[14] H. Xie, 'Voltage Source Converters with Energy Storage Capability', Thesis Royal Institute of Technology Sweden, 2006.
[15] Ollila, J., 'Analysis of PWM-converters using space vector theory – application to a voltage source rectifier, Doctoral thesis, Tampere University of Technology, 1993.

X. BIOGRAPHIES

René van Wesenbeeck received his (MSc) degree from the Delft University of Technology in 1989. He has been working as a senior design engineer and consultant in industry and designed and built switch-mode power supplies for mission critical applications

Currently he is a visiting researcher at the Delft University of Technology.

Pablo Varela Fraile is studying Industrial Engineering at the University of Vigo (Spain). Within the framework of the European Union Student Exchange program Erasmus he is doing his MSc project in the Electronic Energy Conversion group of Delft University of Technology.

Sjoerd de Haan is IEEE senior member since 1992. He is associate professor in power electronics within the section Electrical Energy Conversion of Delft University of Technology.

His current research interests concern electrical systems for dispersed generation, pulsed power and compact converters. De Haan was (co-)author of over two hundred papers, several books and he holds two patents

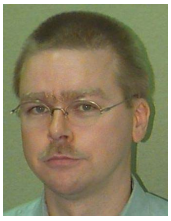

Klaas Visscher senior member and studied electrical engineering at a technical college and subsequently went to university in 1982. He received his Master's degree in 1988 and his Doctor's degree in 1993, both in Applied Physics at Twente University in The Netherlands. Next he worked several years on automation projects in his own consultancy.

In 1999 he joined the Energy Research Centre of The Netherlands, where he first worked on heat storage and thermal processes for renewable energy applications. In 2003 he joined the Intelligent Energy Grids program of ECN, working in the field of distributed power generation. As research co-ordinator Grid Connection and Power Quality in the ECN Intelligent Energy Grids Program, the main topics of his current research are control and stability of distributed electricity generation systems in future grids.