Engine Generator Paralleling Concepts

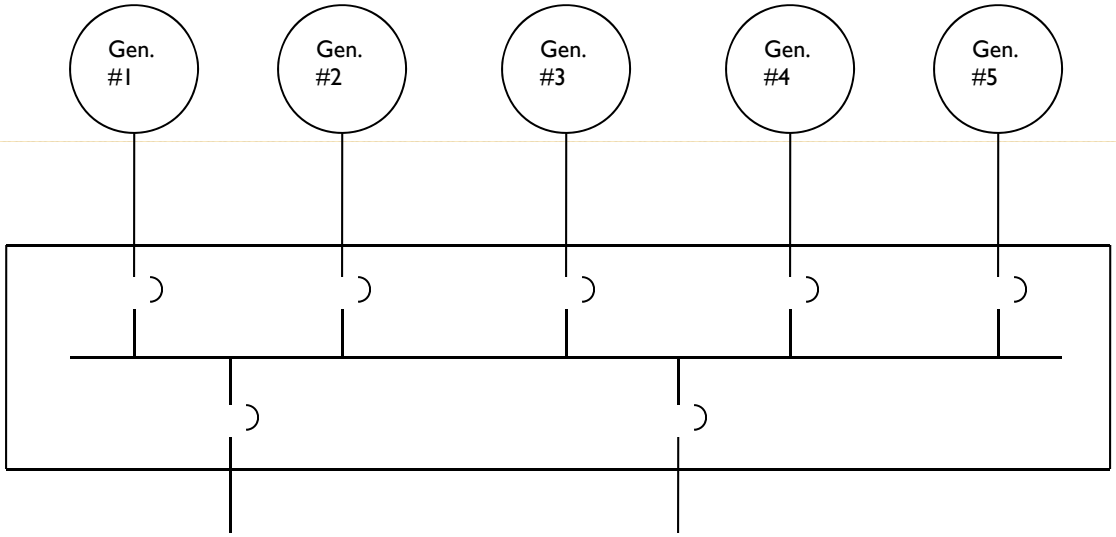

Presenter: Daniel Barbersek

Power Solutions Manager

Generac Power Systems, Inc.

What Topics Will Be Covered

- Upon completion of this presentation, participants will be able to describe the basic concepts and implementation approaches to parallel generator operation including both "Traditional" and today's "Integrated" techniques. They will also be able to identify the advantages of integrated parallel systems over single generator applications. Specifically they will be able to:
  - Describe the concept of creating larger power systems using paralleled generators.
  - Describe generator to grid and generator to generator configurations.
  - Describe the differences between the "traditional" and "integrated" approach to generator paralleling.
  - Describe the electrical requirements needed for proper operation of parallel operation.
  - List and describe the functional and economic limitations of "Traditional" generator paralleling.
  - List and describe the key benefits of the "Integrated" approach to generator paralleling.
  - List and describe the key benefits of an "Integrated" parallel system over a "Single" generator.

What is paralleling?

- Generator to Utility (Grid Inter-Connected)
- Generator to Generator

Generator to Utility Grid Connection

- Electrically connected to the utility grid
- Energy management
  - Emissions (natural gas engines)
  - Spark Spread (cost feasibility)
  - Utility barriers (standby charges, ratchets, grid interconnect)
  - EPA Regulated – Tier 4 Required Engines if utilizing diesel

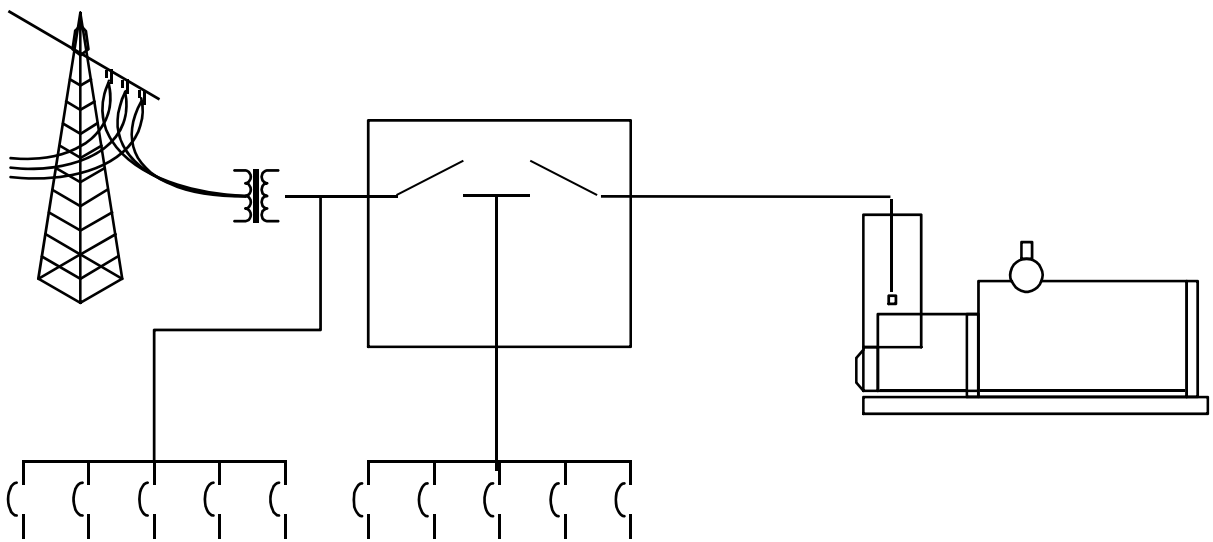

Momentary Grid Paralleling

- "Make-before-break" transfers
  - CTTS (less than 100 msec)
  - Soft-load Closed transition (few seconds)
  - Synchronize the generator to the utility momentarily
  - Exercise with load
  - No outage on retransfer
  - Circuit Breaker or Contactor Styles available

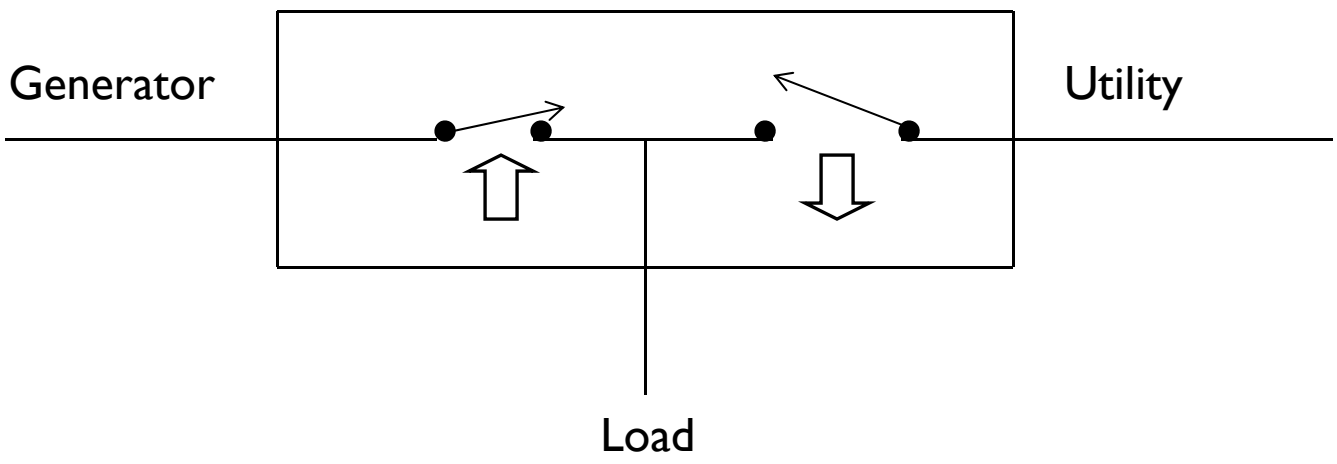

Paralleling Generators for Capacity

- What is a paralleling system?

  Two or more generators are electrically coupled together using special equipment to form a larger capacity power source.

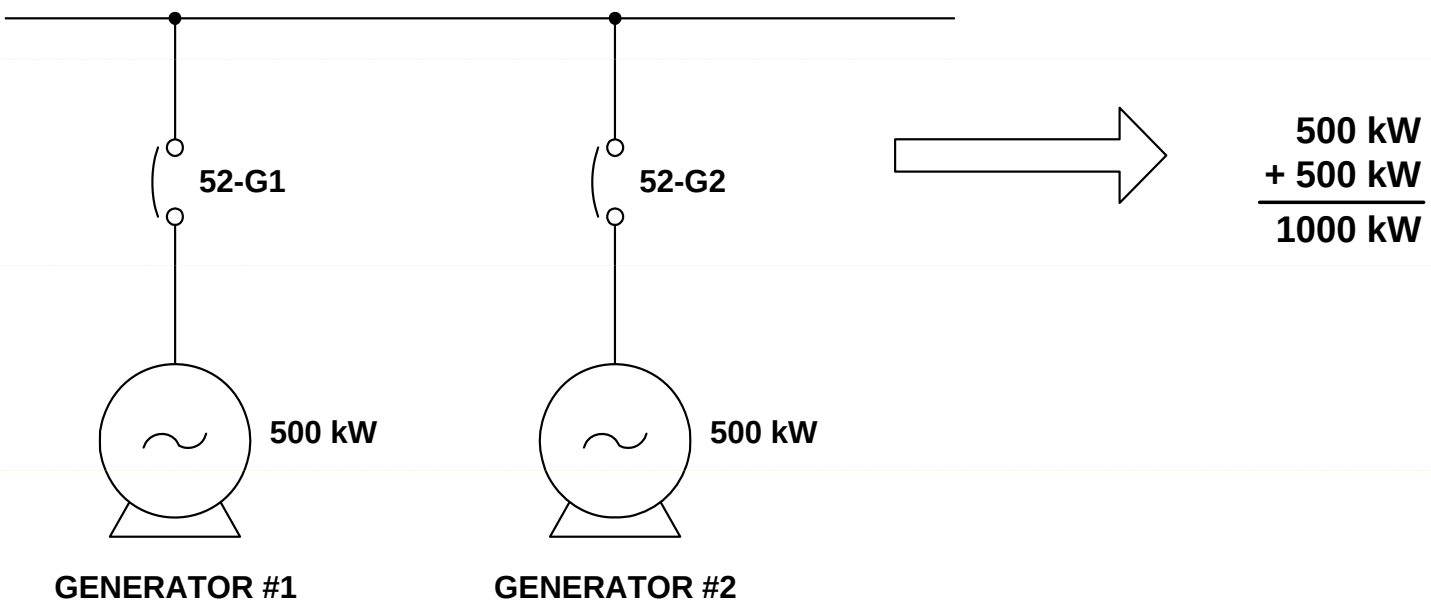

Paralleling Generators for Redundancy

- N + 1

  The customers load requirements would be 500kW even though the system can create 1000kW. This leaves the system the ability to maintain the critical load in the event that one of the generators is taken off-line.

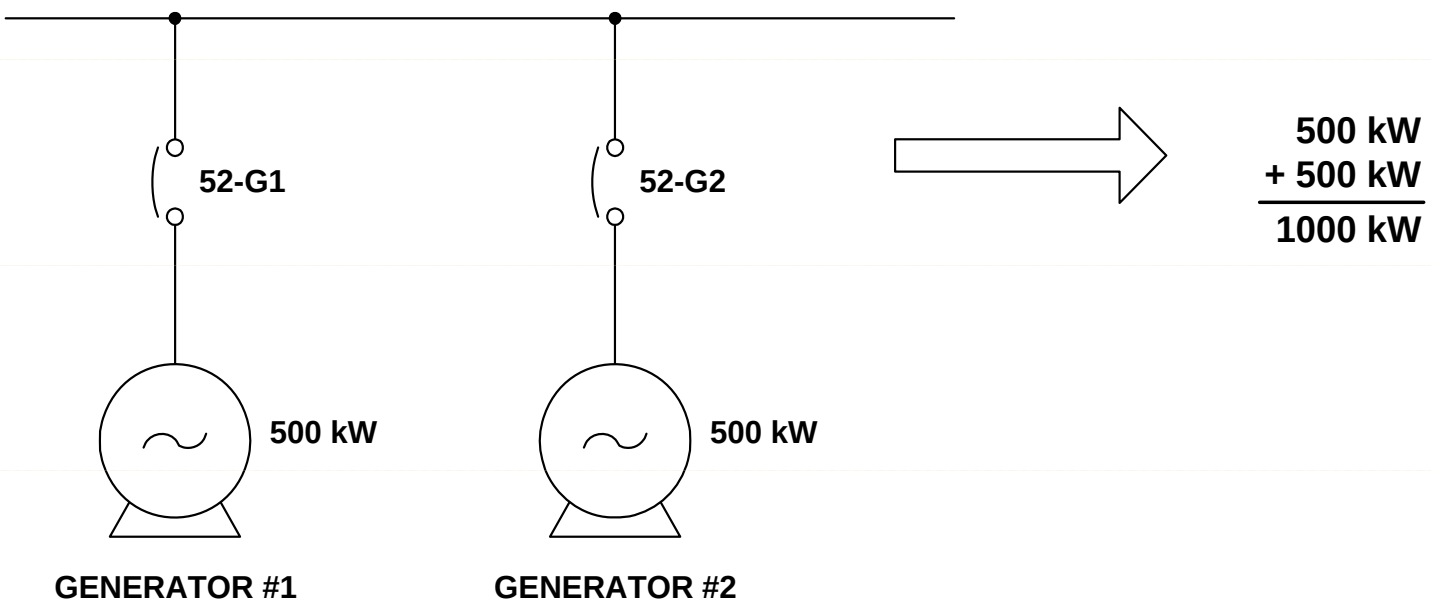

Paralleling Generators

Why use a paralleling system?

- Reliability
  - Accepted market reliability for single engine is 98-99%
  - Redundant systems offer multiple nines reliable for the critical loads
    - N+1 reliability (99.96 to 99.99%)
    - N+2 reliability (99.9992 to 99.9999%)

- Scalable
  - Ability to expand as your client's needs grow
  - Don't over build – preserve capital

- Serviceable
  - Protect the critical loads while servicing the generator(s)

Paralleling Generator to Generator

Why not use a paralleling system?

Traditional implementations have limitations

- Cost (capital, installation, commissioning)
- Complexity
- Space

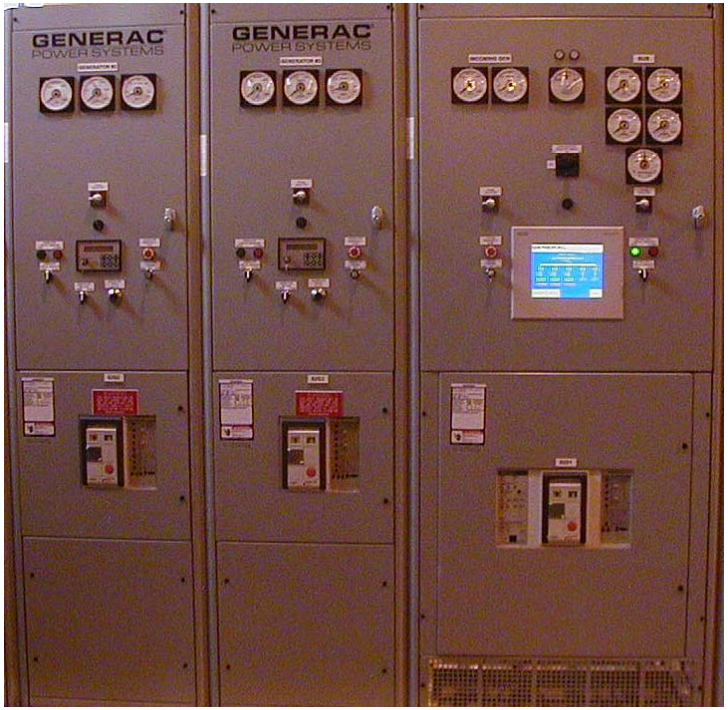

What is Required to Parallel Generators

Synchronizing
Switching Device
Load Sharing
Protection

Getting Started - Preliminary

- Prior to Synchronizing
  - Electronic governor -- load sharing
  - Electronic voltage regulator w/ paralleling capability
  - Identical internal alternator winding pitch (i.e. 2/3, 4/5, etc).
  - Same number of phases
  - Same phase to phase voltage
  - Same phase rotation

Synchronization

Key Elements for paralleling generators
Light goes dim – Push it in!

Synchronizing Controls

- Waveform Alignment
  - Engine Speed needs to be controlled
  - Alternator Voltage needs to be adjusted

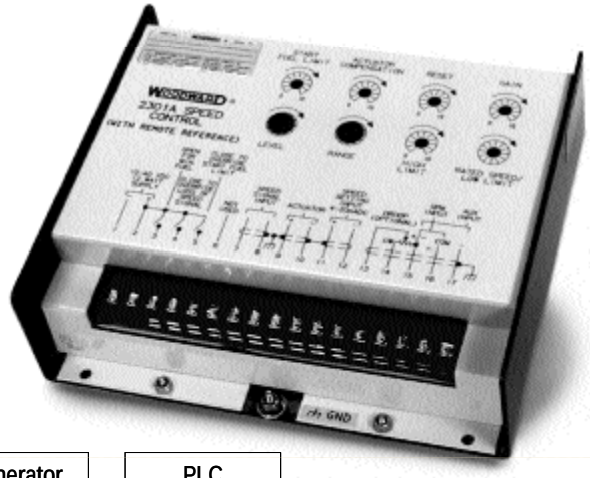

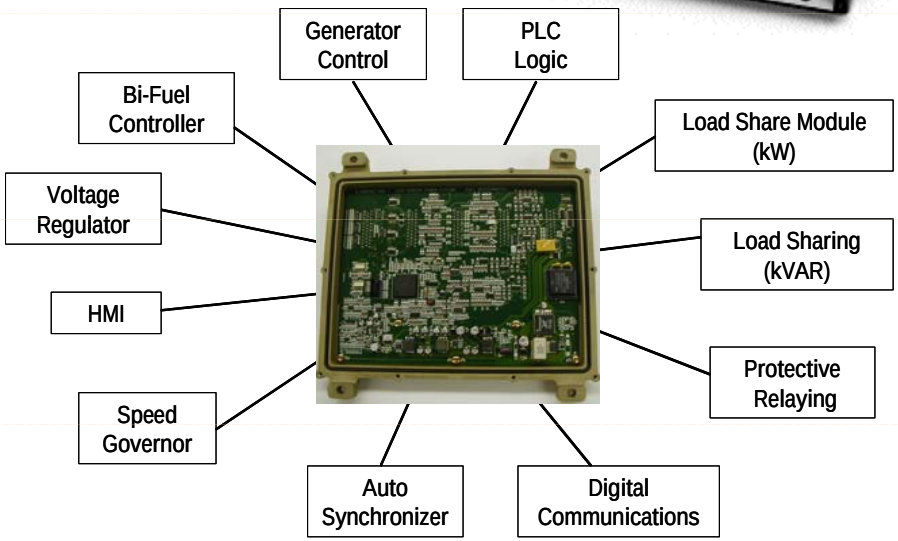

Synchronization – Wave Form Alignment

Electrically <u>locking</u> two "machines" together

- Voltages matched
- Frequencies matched + Slip frequency offset
- Phase angles matched

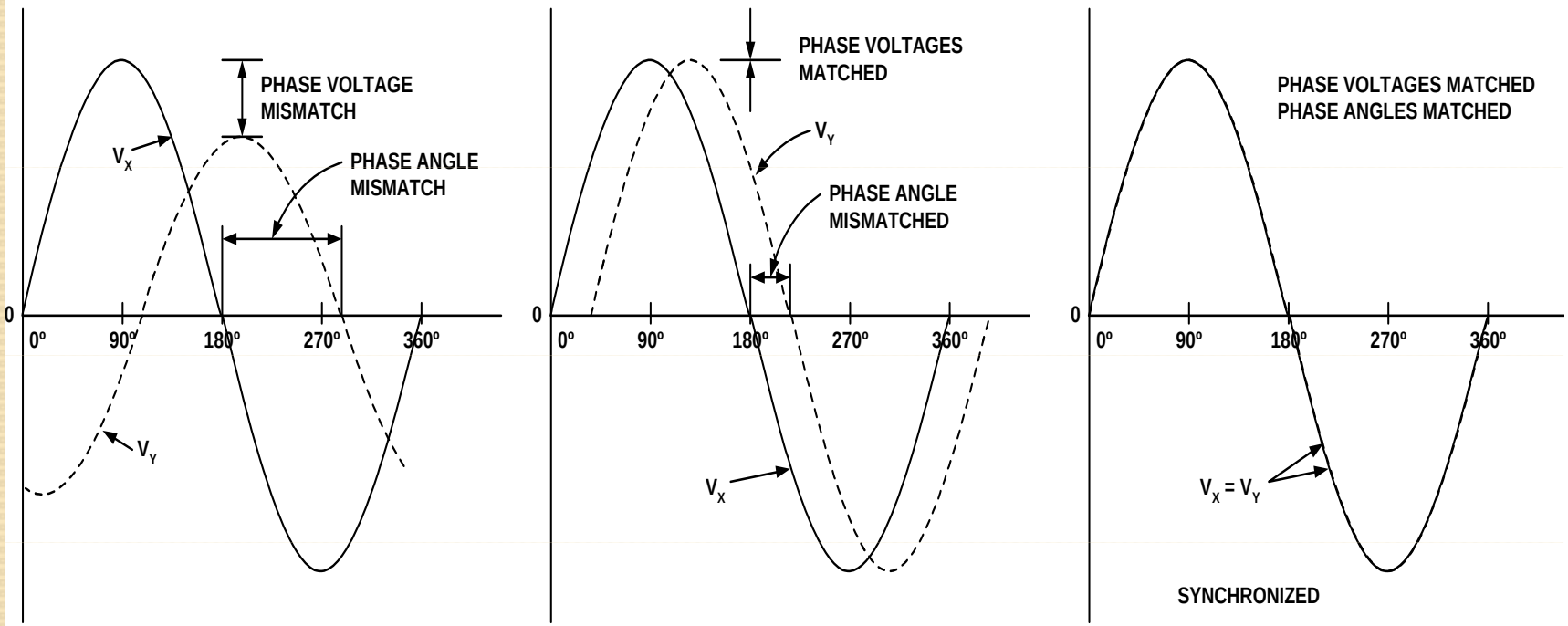

Synchronizing – Stage 1

Voltage level and alignment has been satisfied

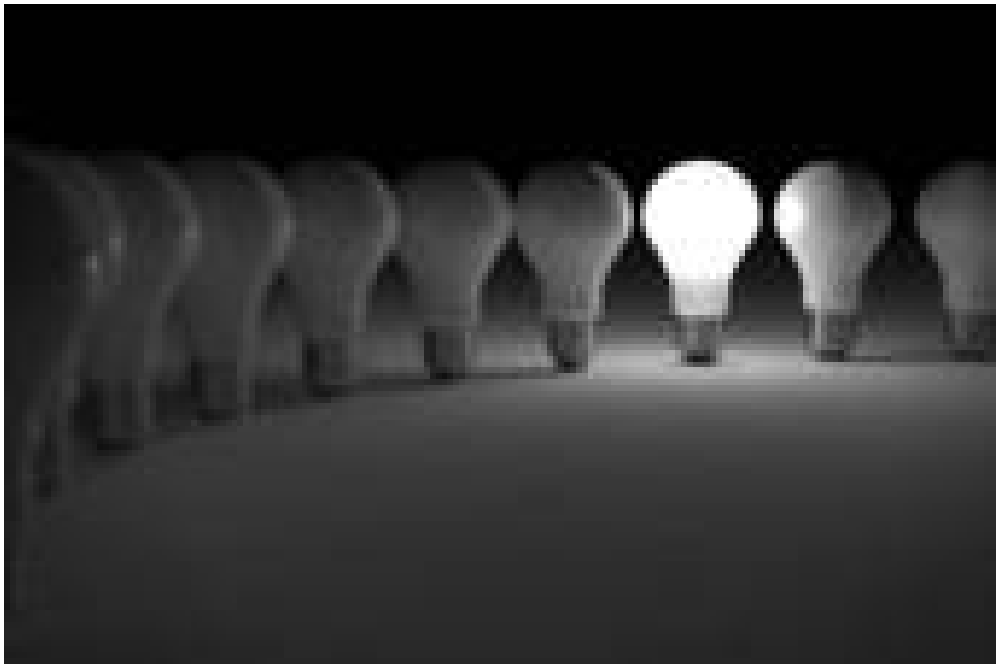

Device Switching

Traditional Switching – Utilizing Circuit Breakers

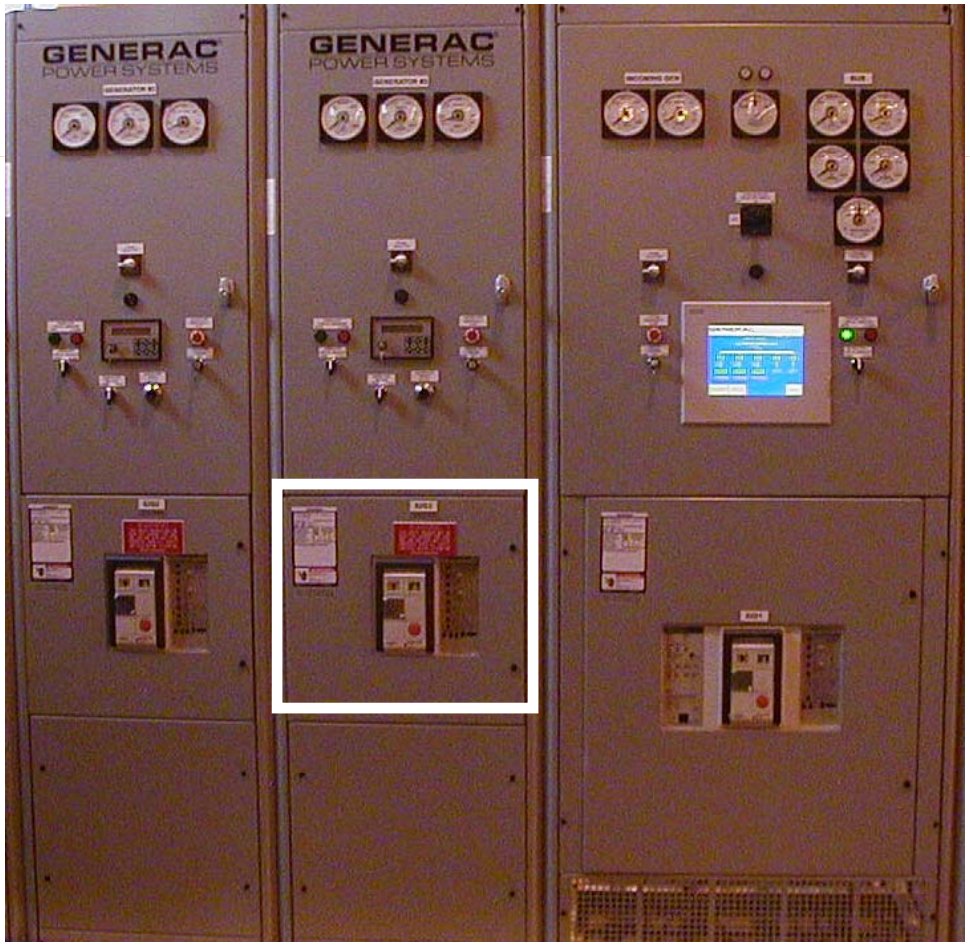

Integrated Switching

Integrated Switching – Utilizing Contactor Mounted on Generator

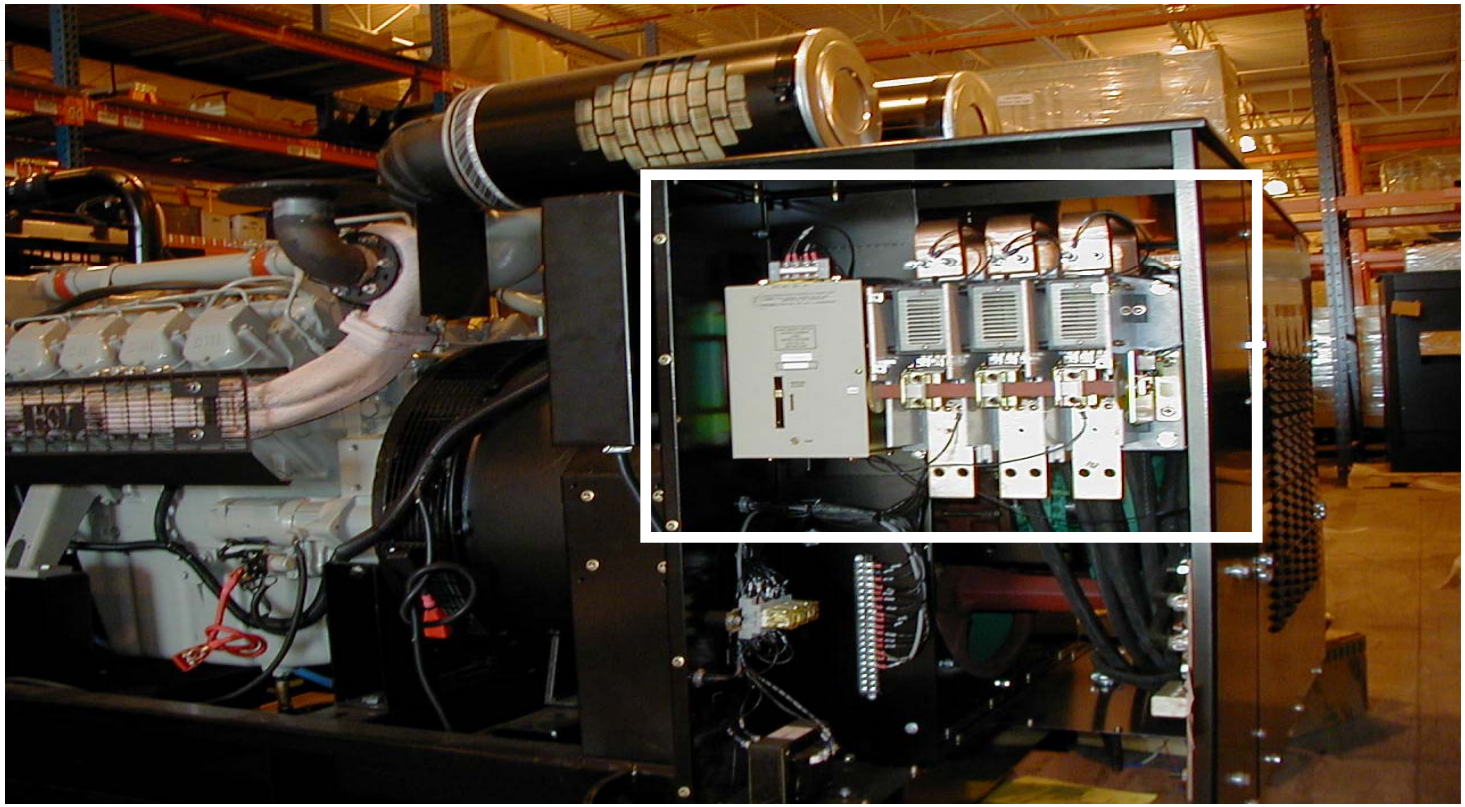

Electrical Interlock – Stage 2

- Generators are now electrically interlocked
- There is not enough force provided by the prime mover to break the generators apart

Load Sharing – Power Balance

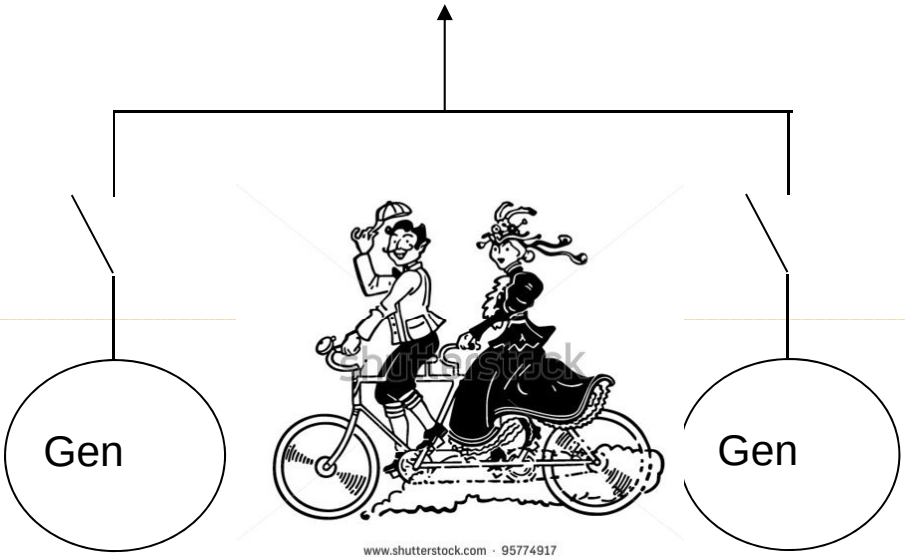

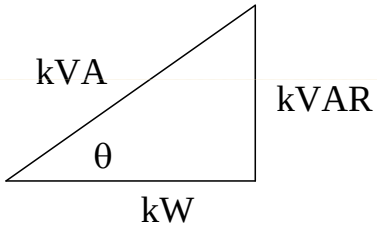

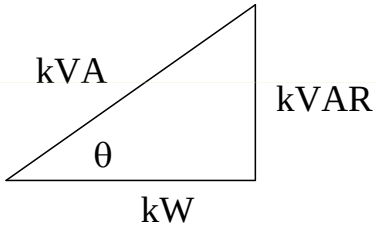

Load Sharing Protection

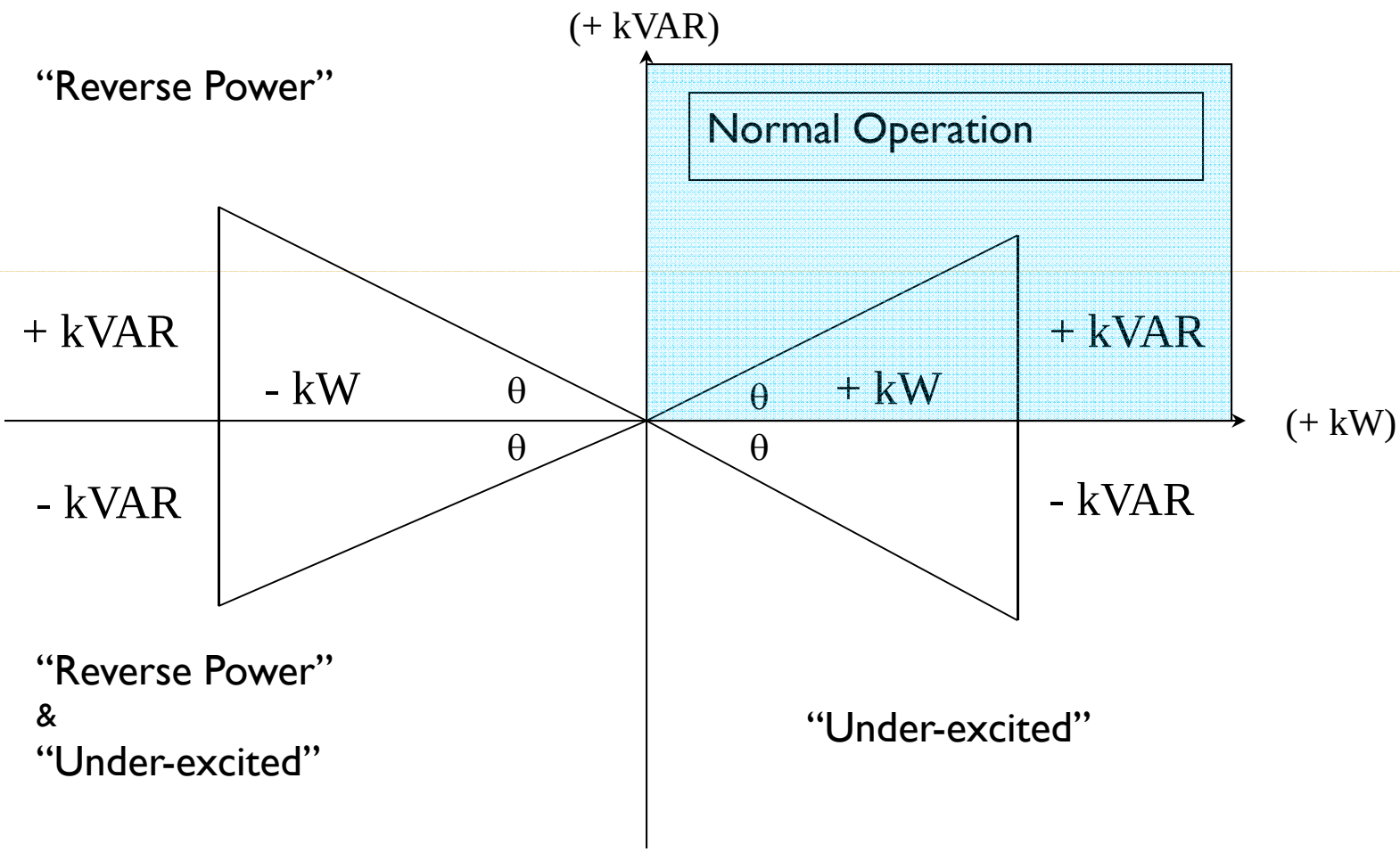

Load Sharing

Load Sharing (Matching)

- Real Power (kW)
  - Isochronous load sharing or speed droop
- Reactive Power (kVAR)
  - Reactive cross current or voltage droop

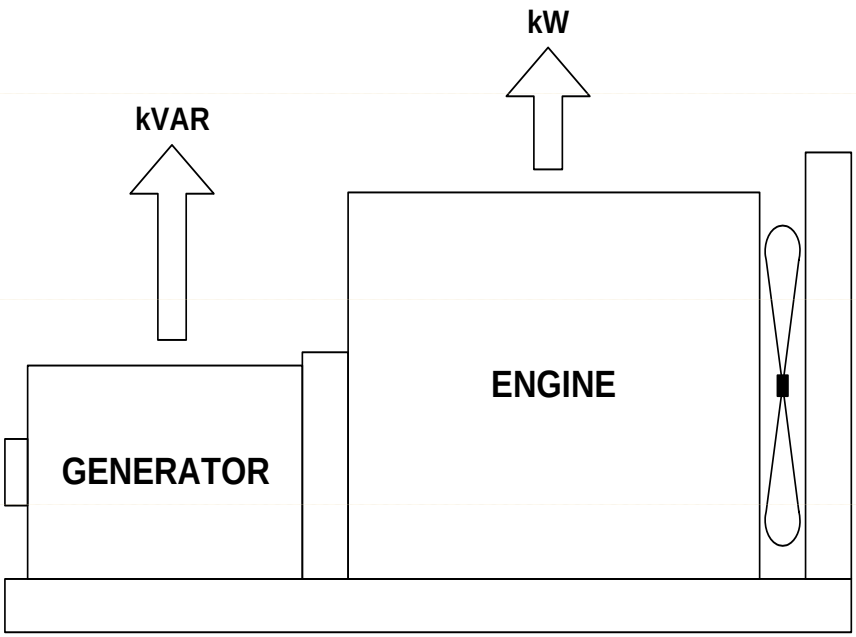

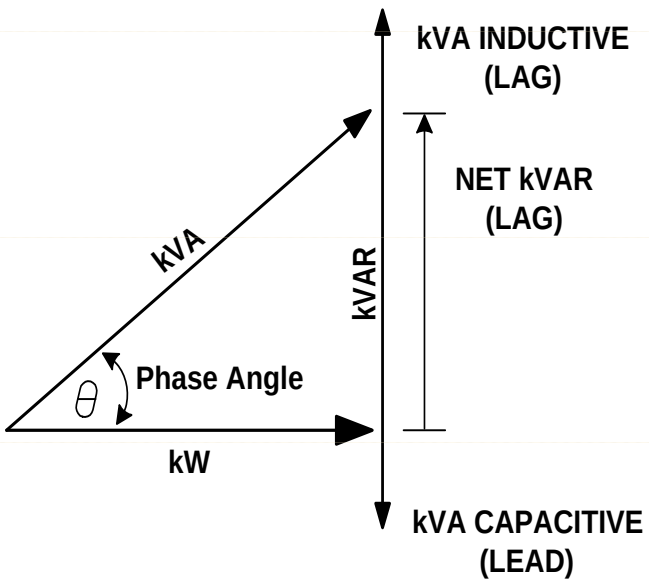

Isochronous Governors

Isochronous governors

What happens if two are connected together??

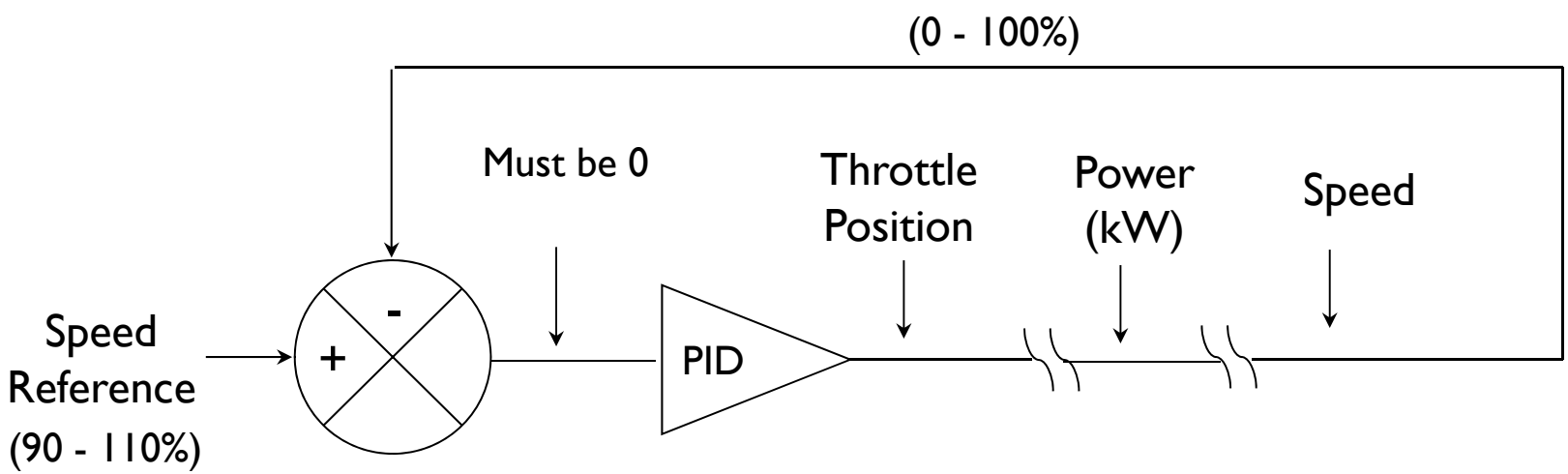

Understanding Droop

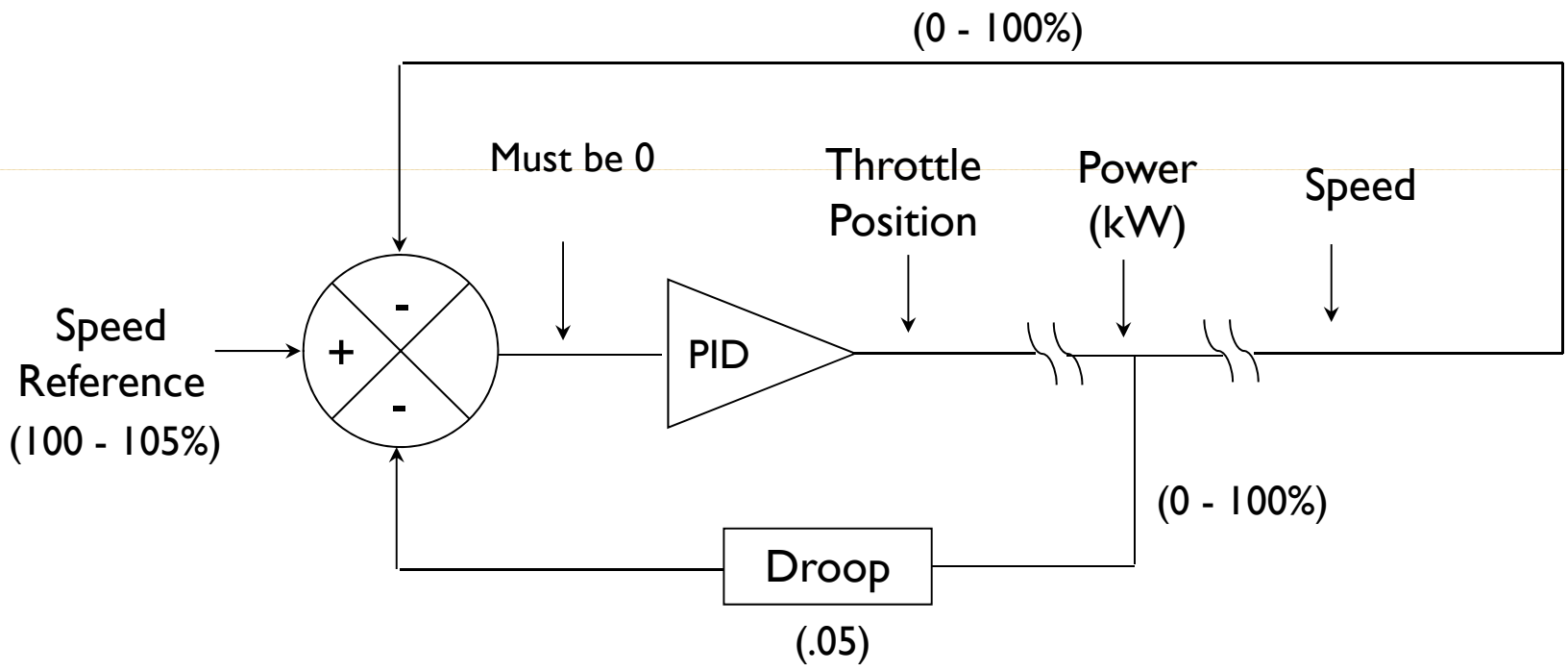

Load Sharing Control Circuit

Traditional load sharing

- Isochronous load sharing
- Reactive Cross Current Compensation
- Struggles with calibration, stability, electrical noise

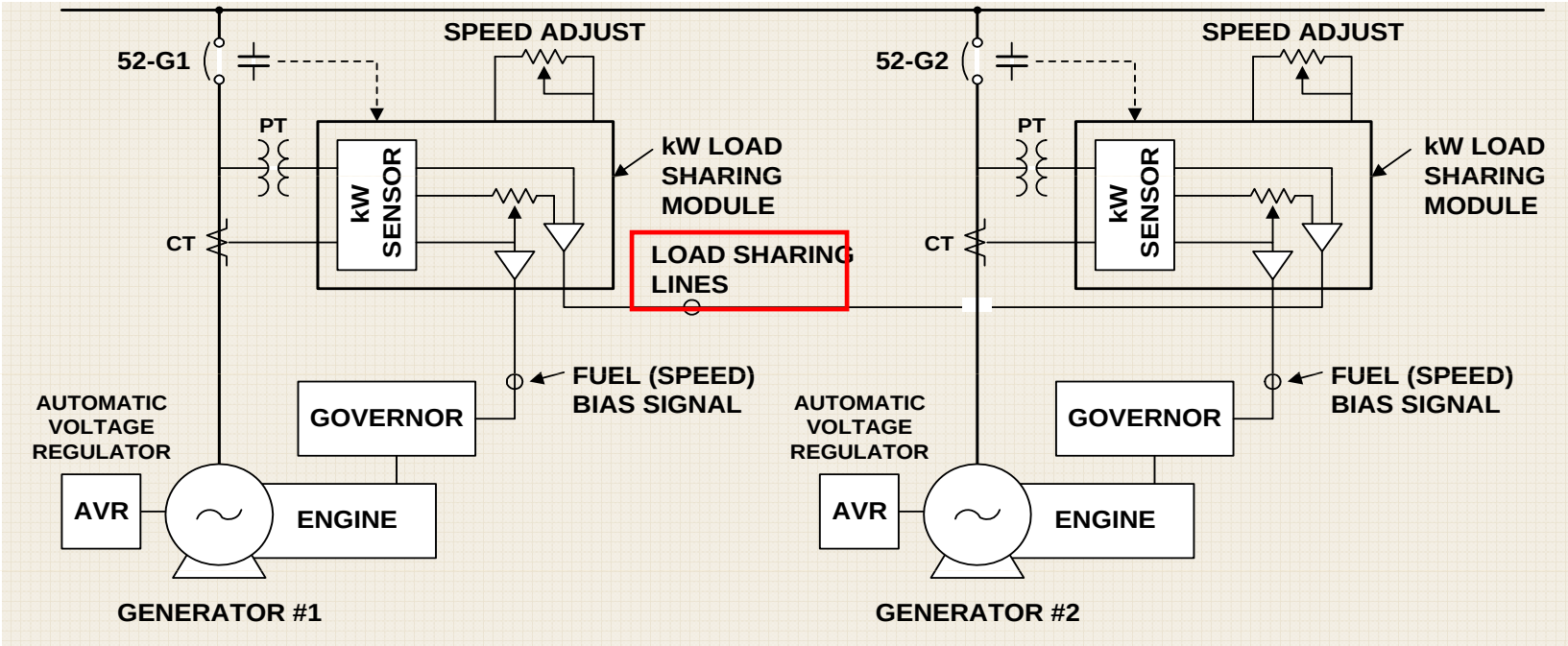

Droop Load Sharing

Speed droop graphical representation
Will two speed droop governors share load?
What is the negative consequence?

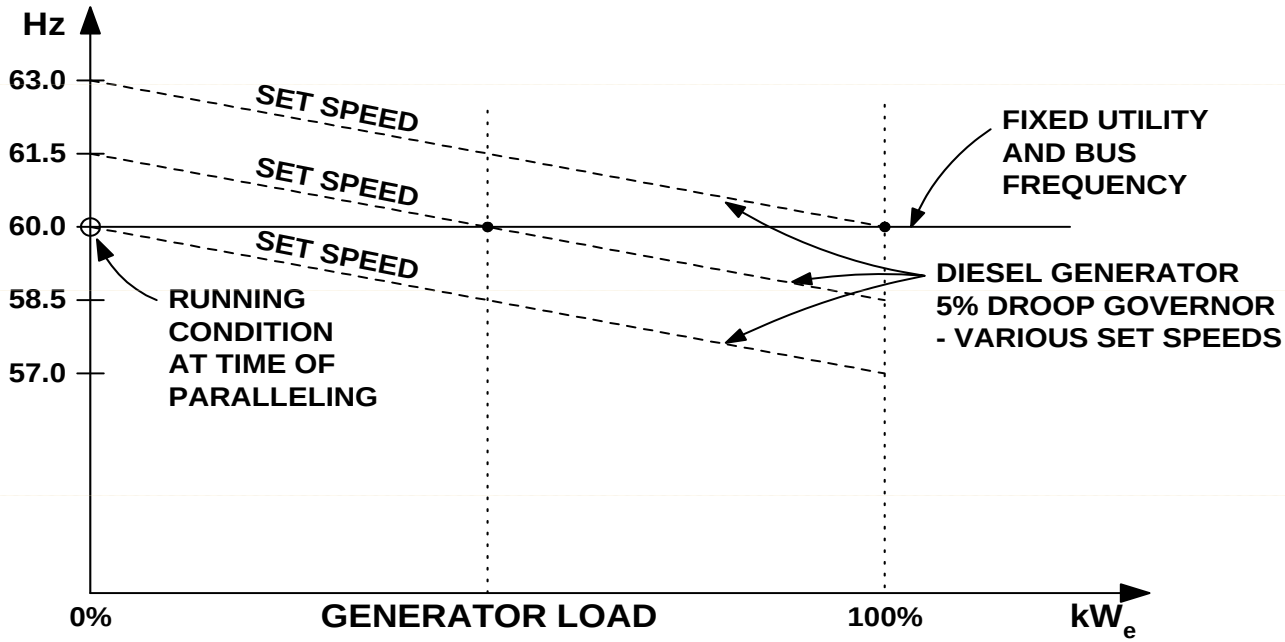

Traditional Control vs. Integrated

Traditional Approach

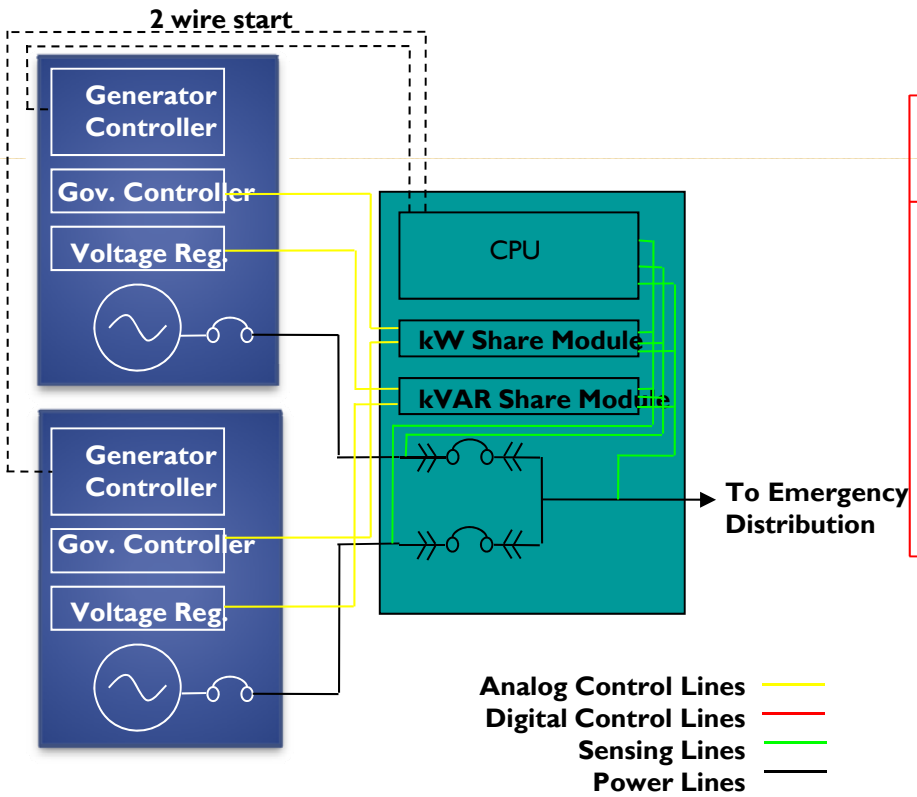

Integrated Approach

- Simple
- Reliable
- Single Source

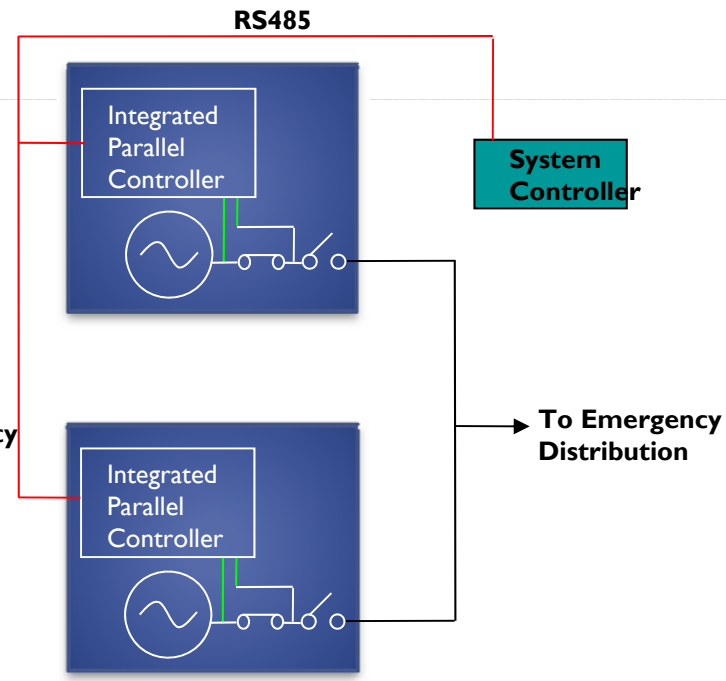

Protection

- Synchronizing process
  - 25 sync check relay
- Real power system (governor & engine)
  - 32 reverse power
  - 81 o/u frequency protection
- Reactive power system (regulation & excitation)
  - 27 / 59 voltage protection
  - 24 over excitation & volts/hz
- Cabling & alternator
  - 50 / 51 Overcurrent

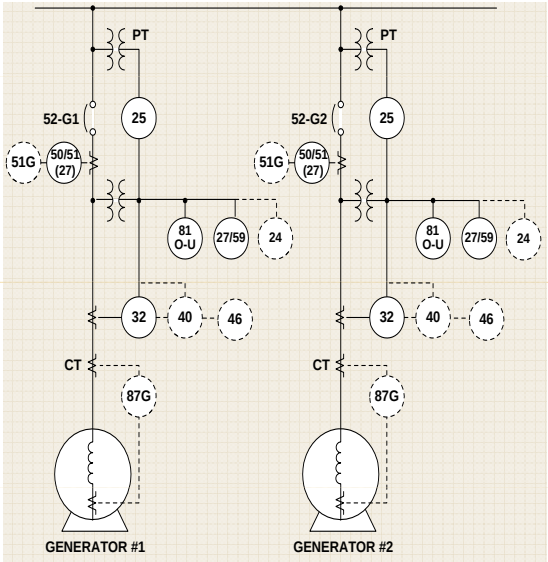

Integrated Sequence of Operation

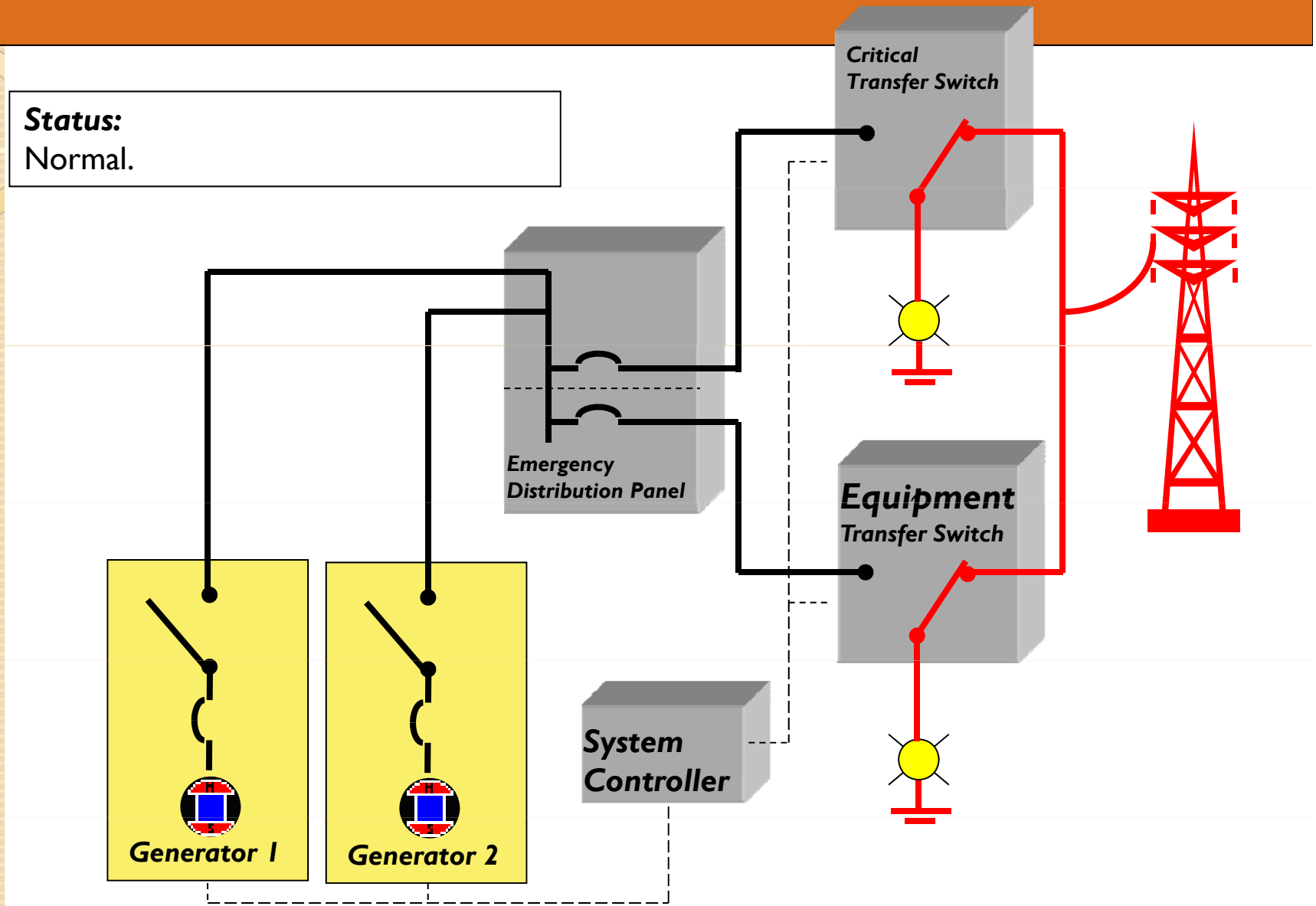

Integrated Sequence of Operation

Status:
Utility failure.

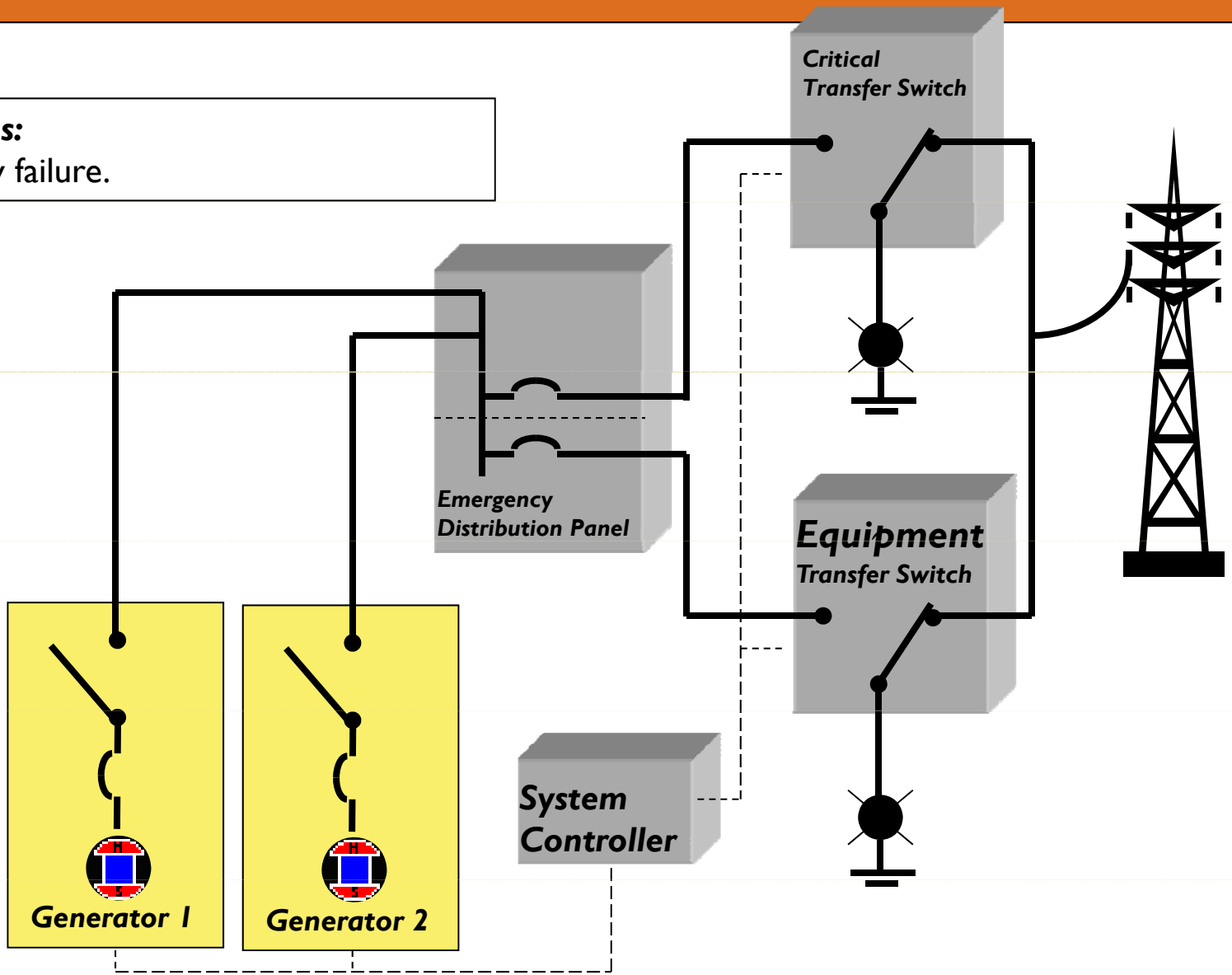

Integrated Sequence of Operation

Status:
Generators start.

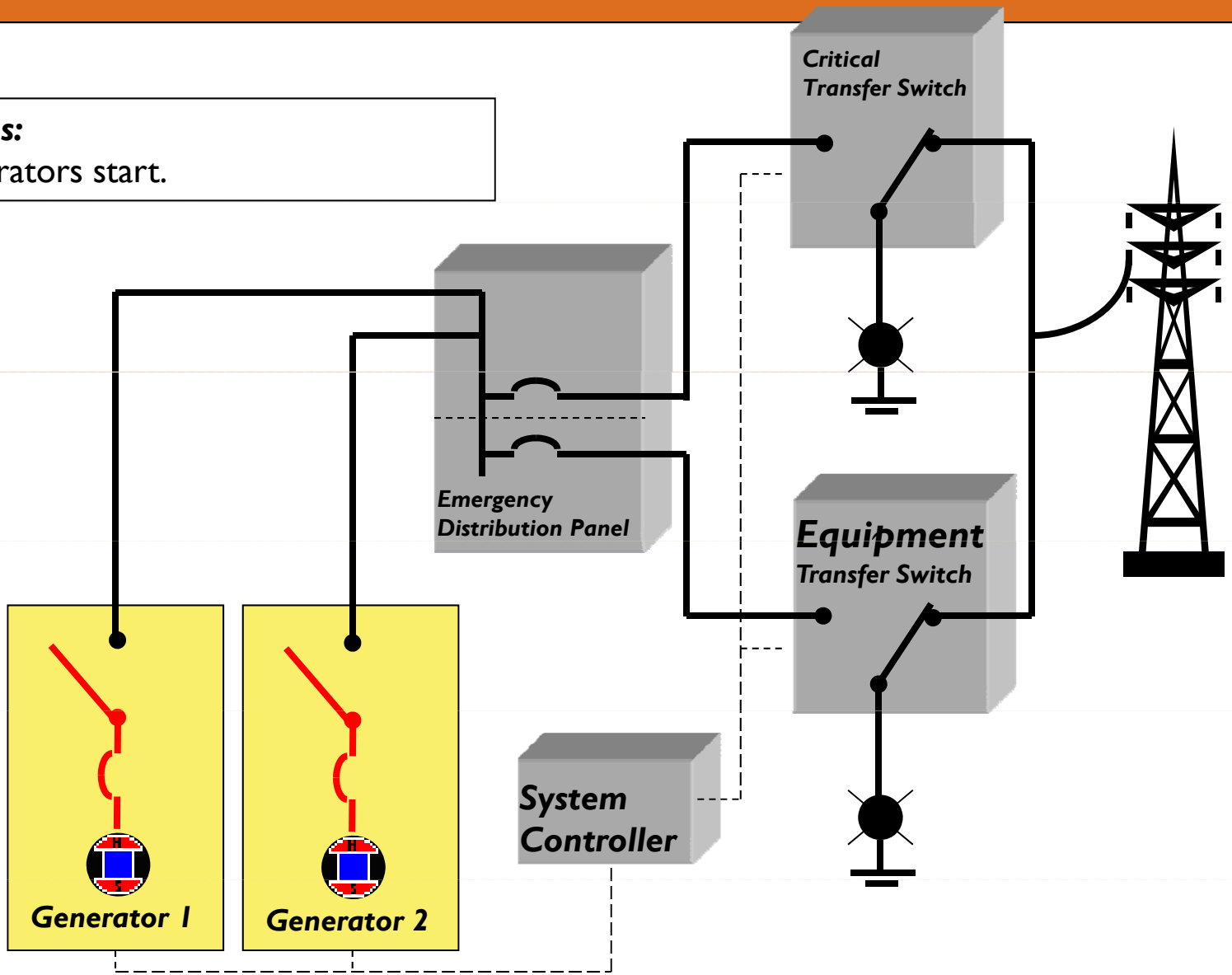

Integrated Sequence of Operation

Status:
First generator at rated output.
Energizes the emergency distribution panel.

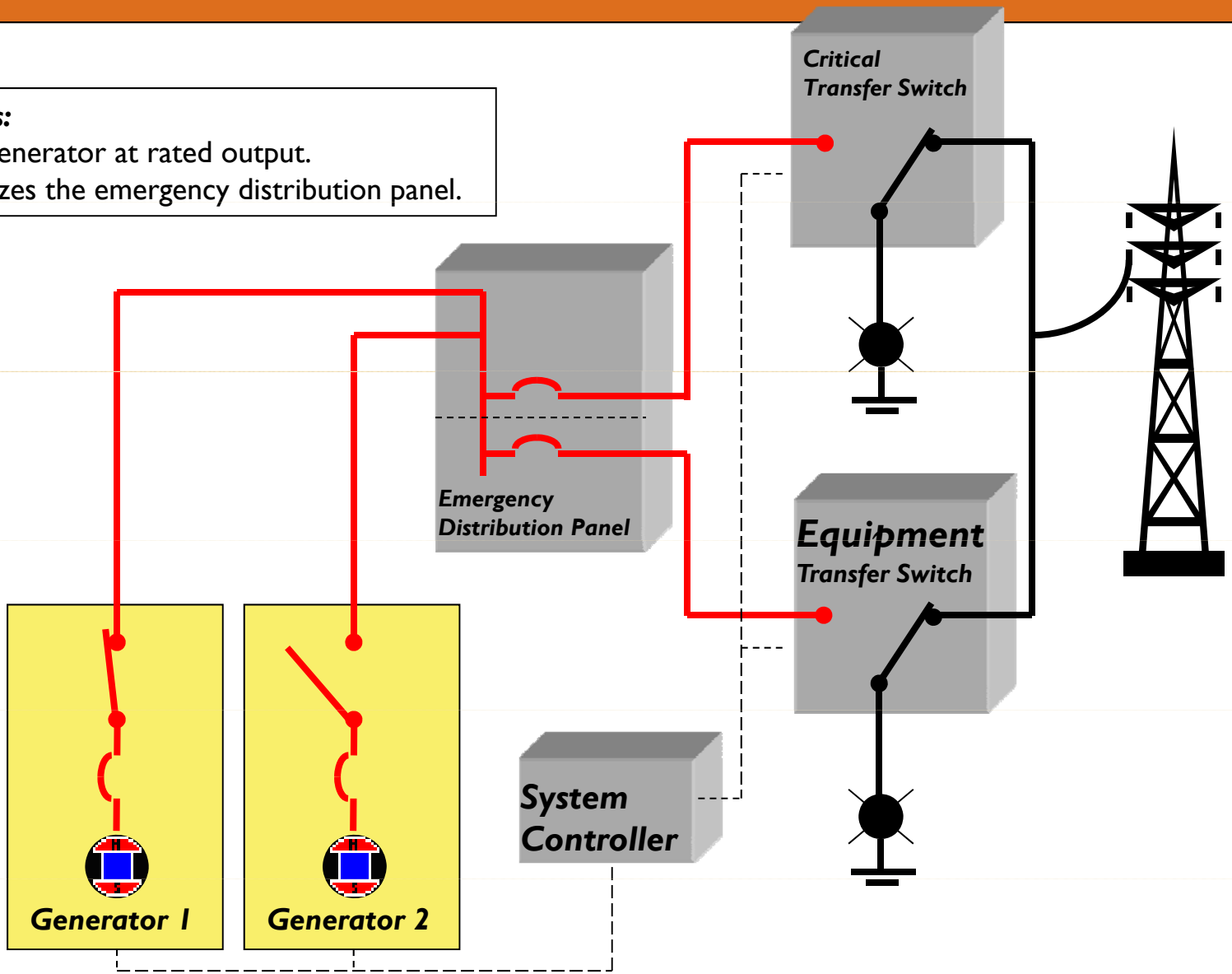

Integrated Sequence of Operation

Status:
Picking up the critical load in 10 seconds.

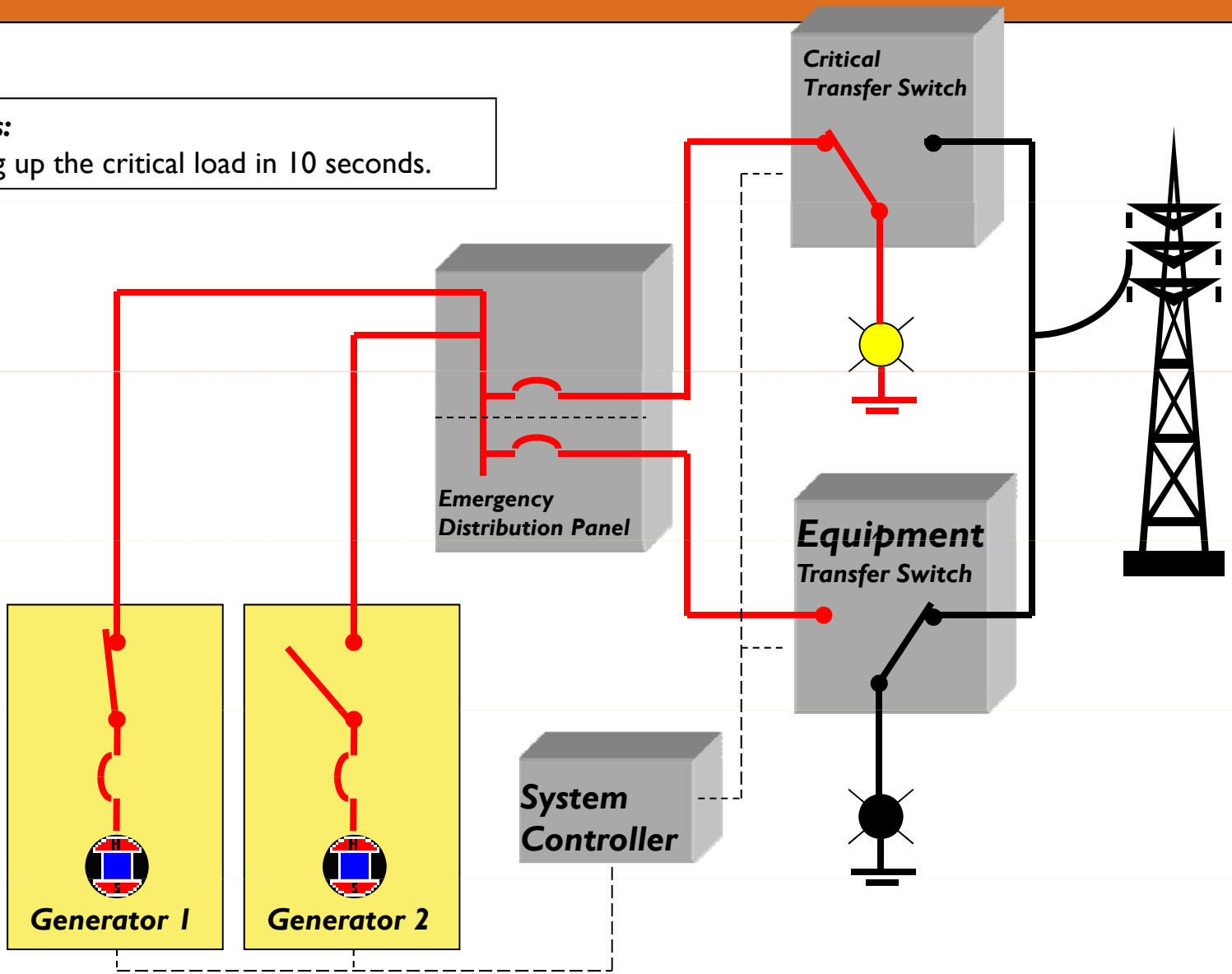

Integrated Sequence of Operation

Status:
Equipment load transfers to the generators.

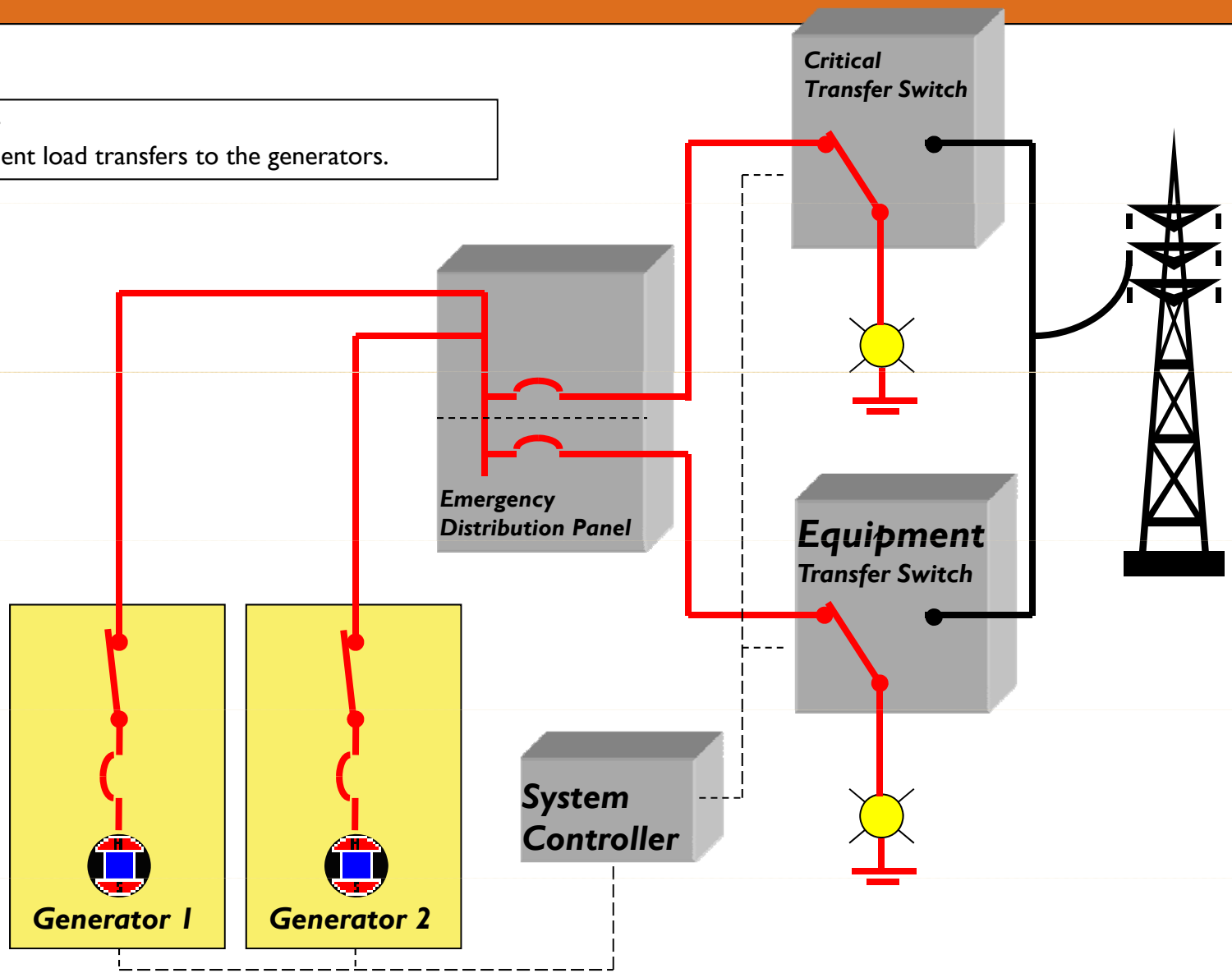

Integrated Sequence of Operation

Status:
If a generator is out of service, it separates from the system. Non-critical load is shed.

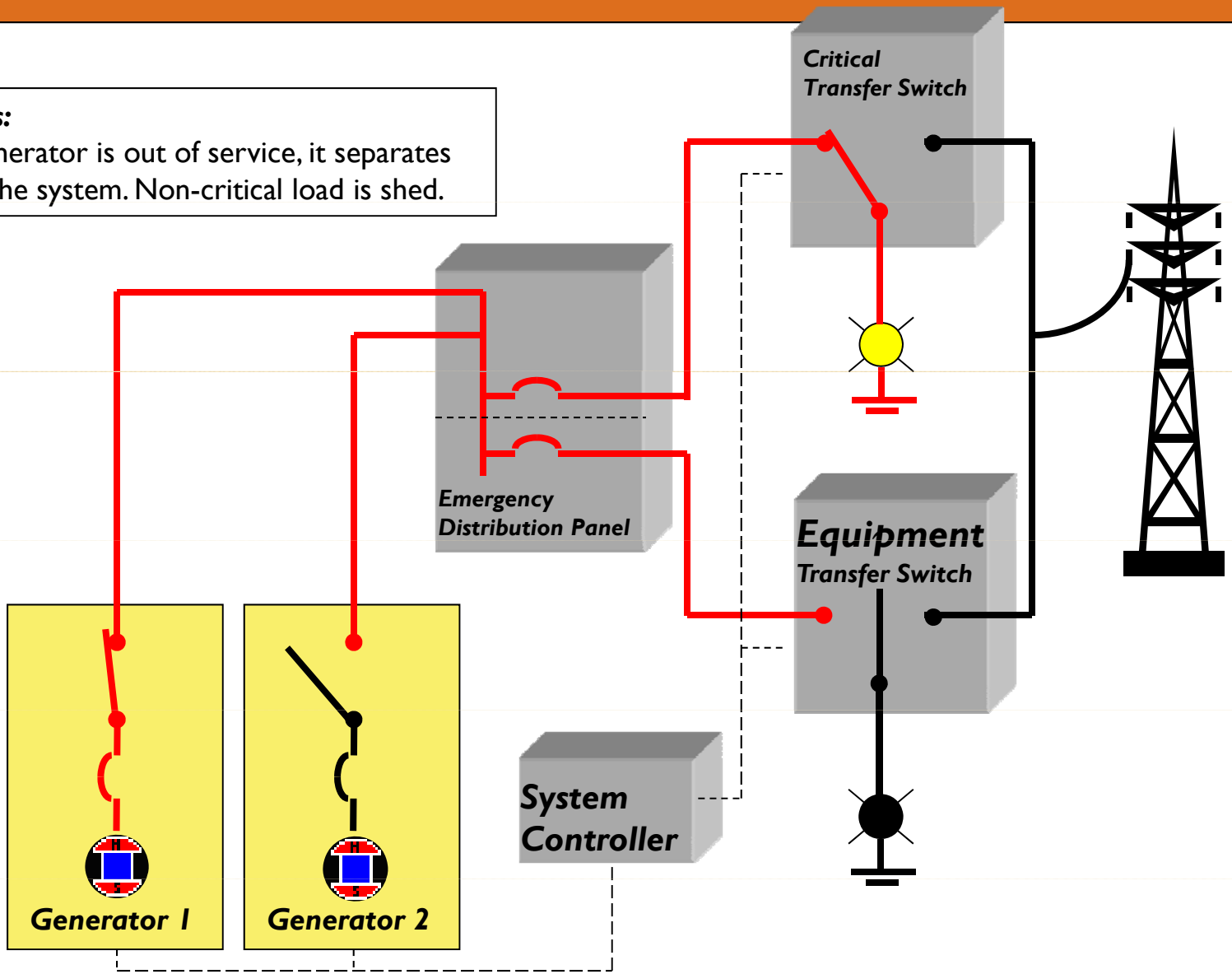

Integrated Sequence of Operation

Status:
Generator is restarted.

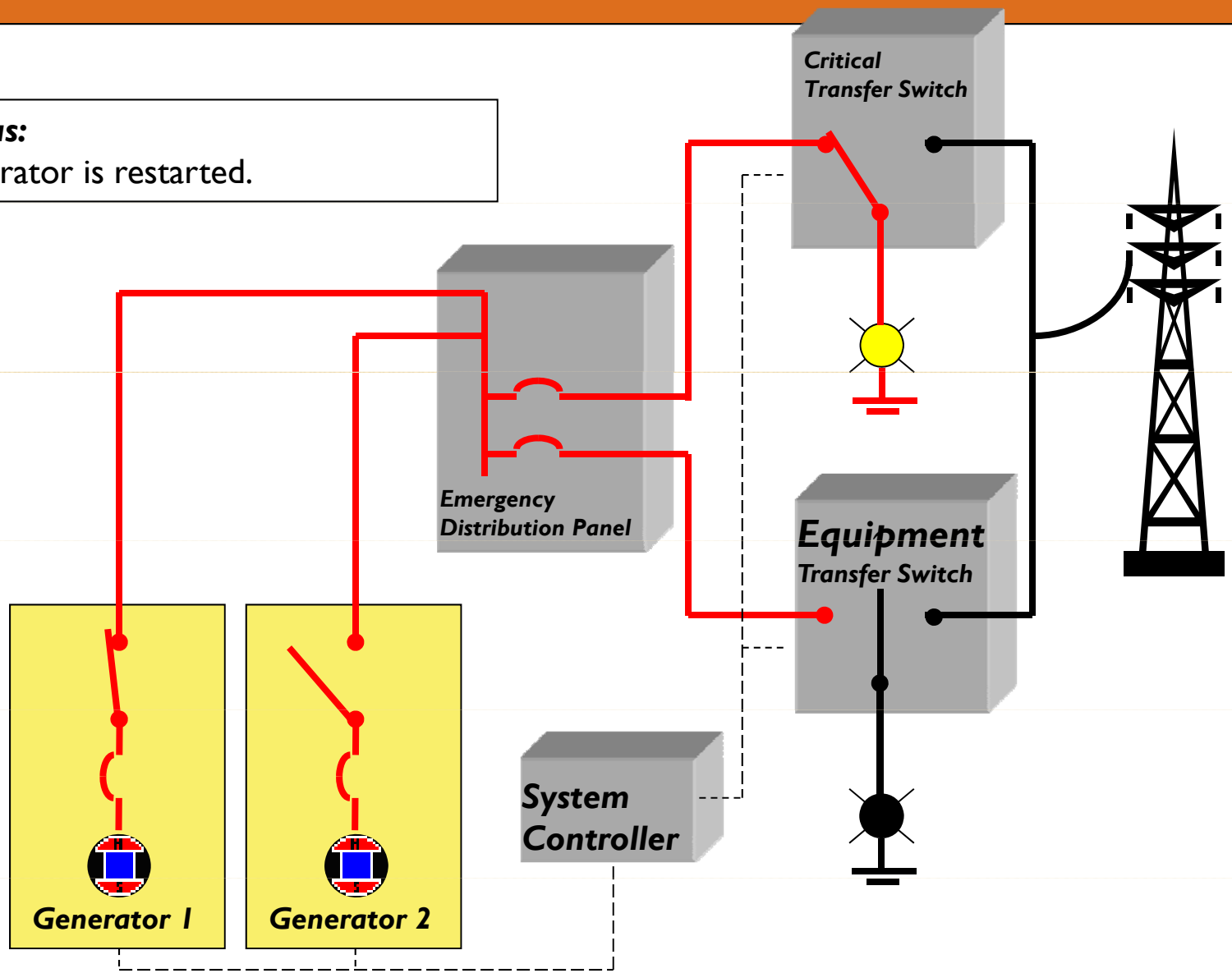

Integrated Sequence of Operation

Status:
Generator parallels to the system.

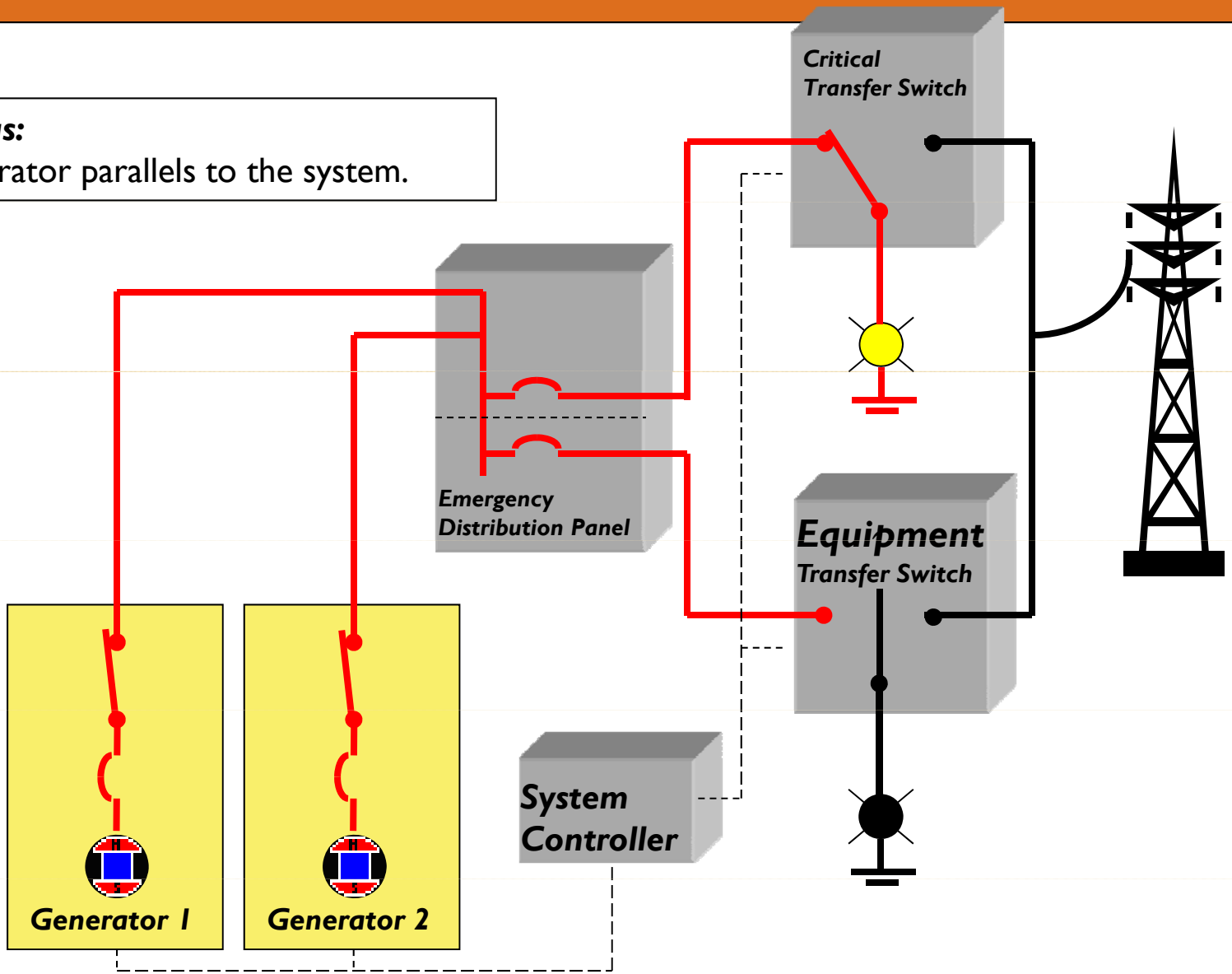

Integrated Sequence of Operation

Status:
Equipment load is re-energized.

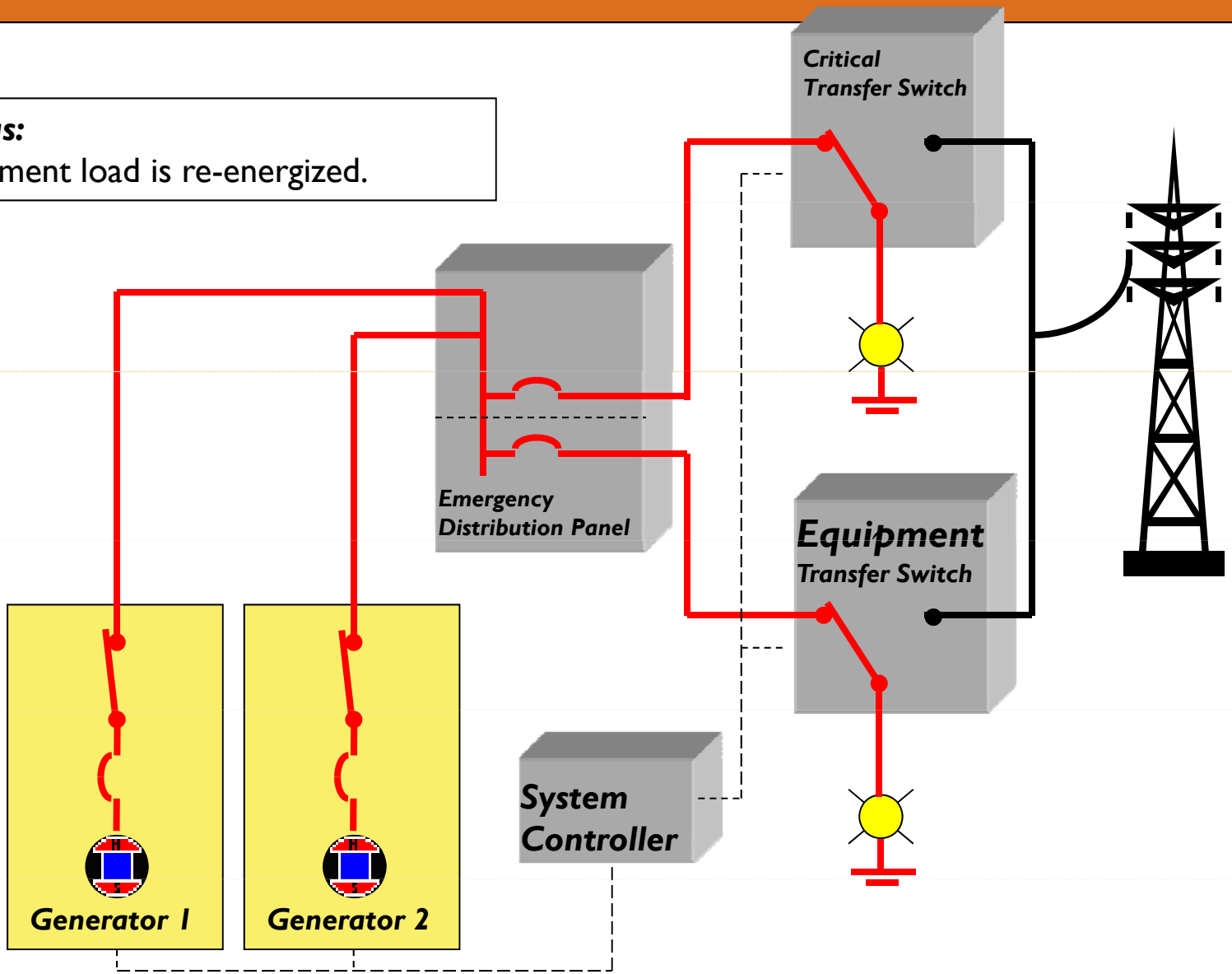

Integrated Sequence of Operation

Status:
Utility is re-energized.

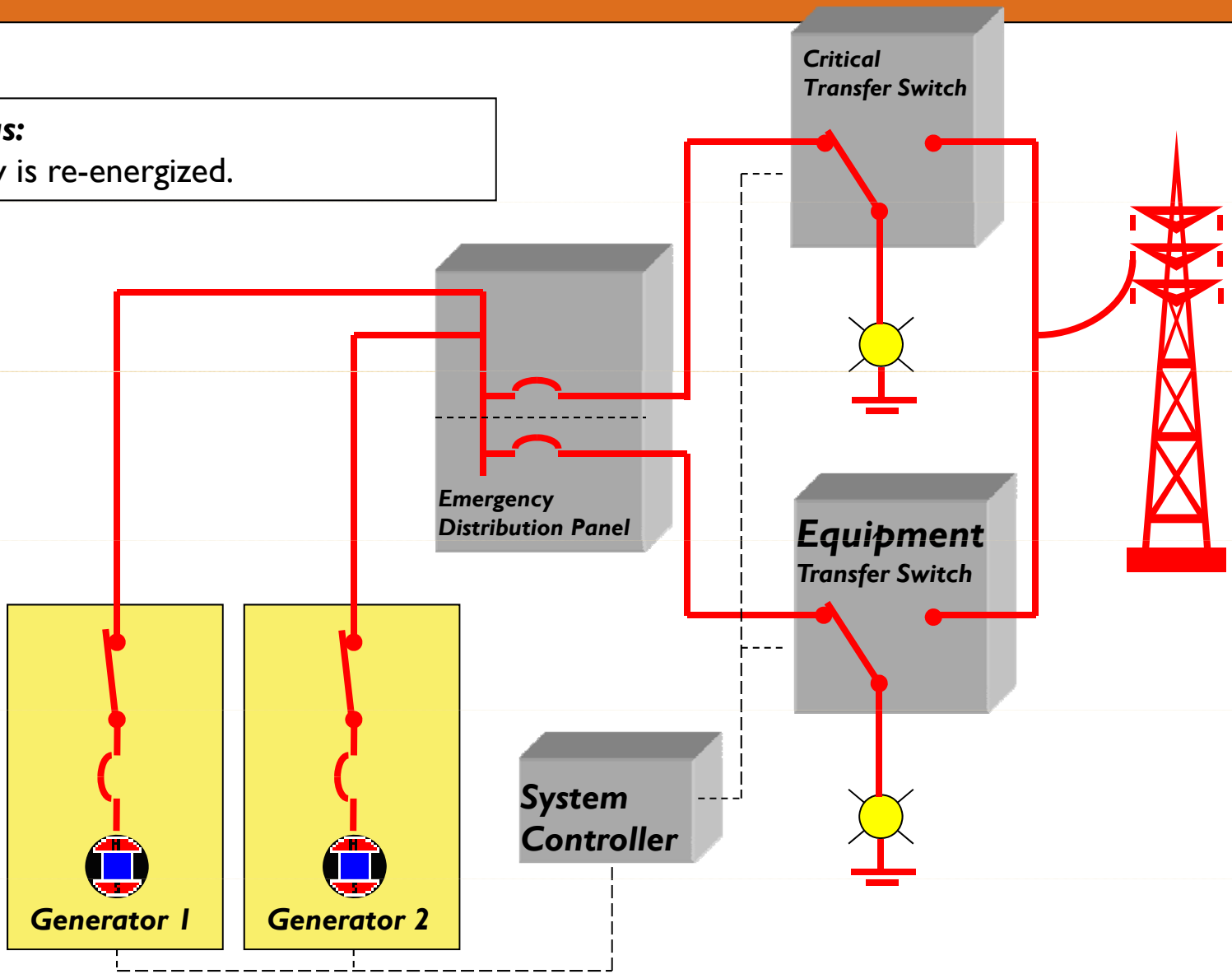

Integrated Sequence of Operation

Status:
Load is transferred back to utility.

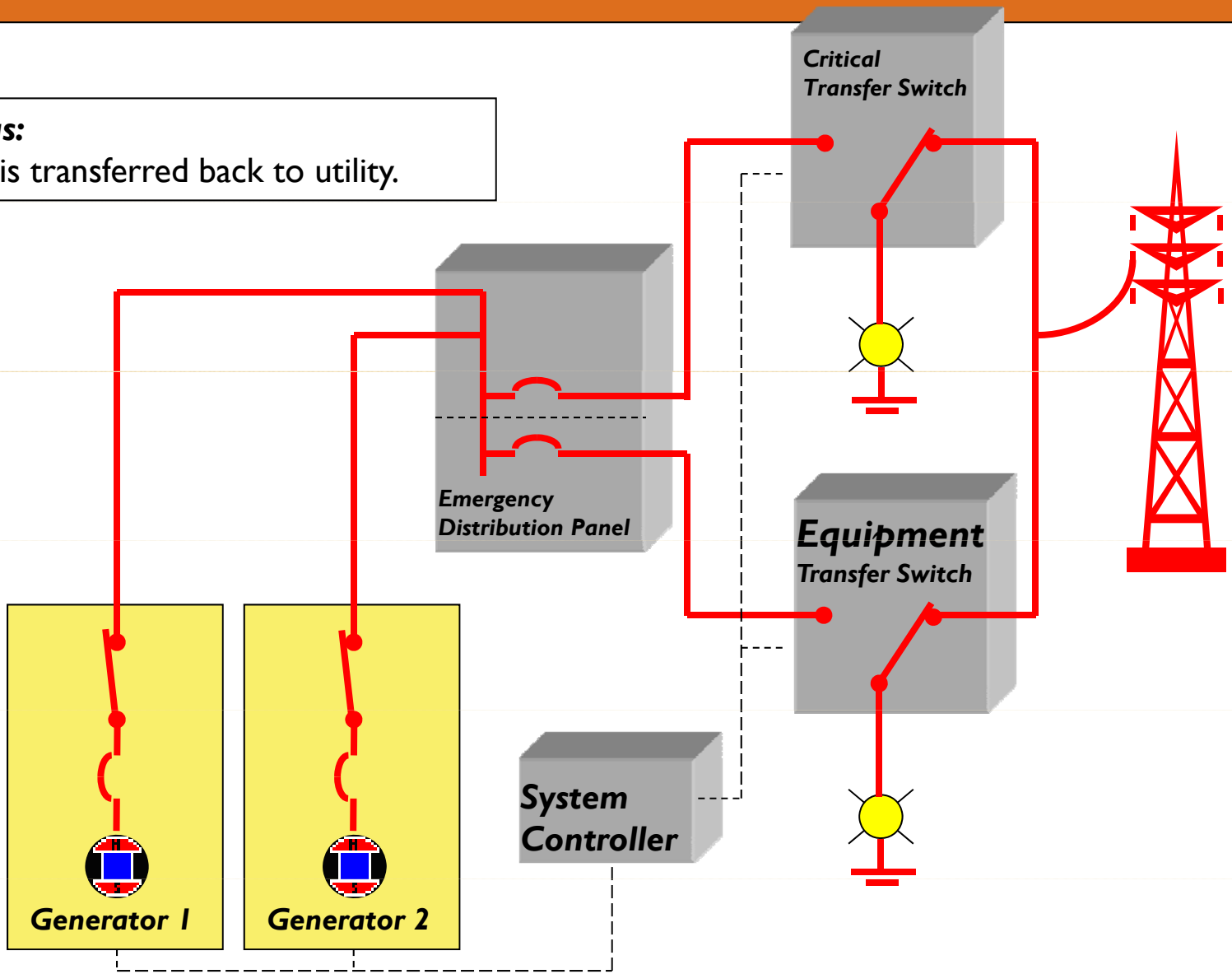

Integrated Sequence of Operation

Status:
Generators cool down.

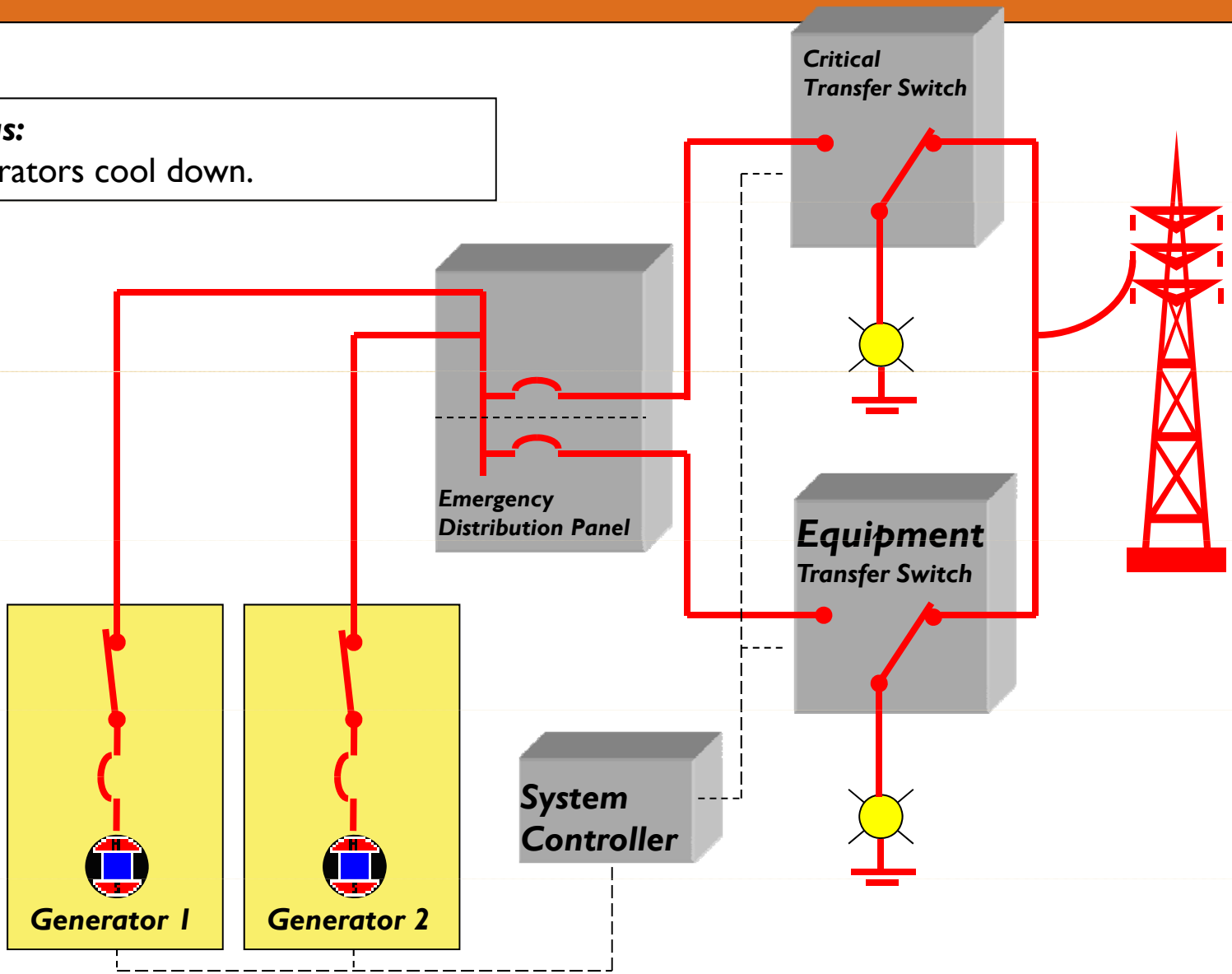

Integrated Sequence of Operation

Status:
Generators disconnect from system.
Generators shut down.

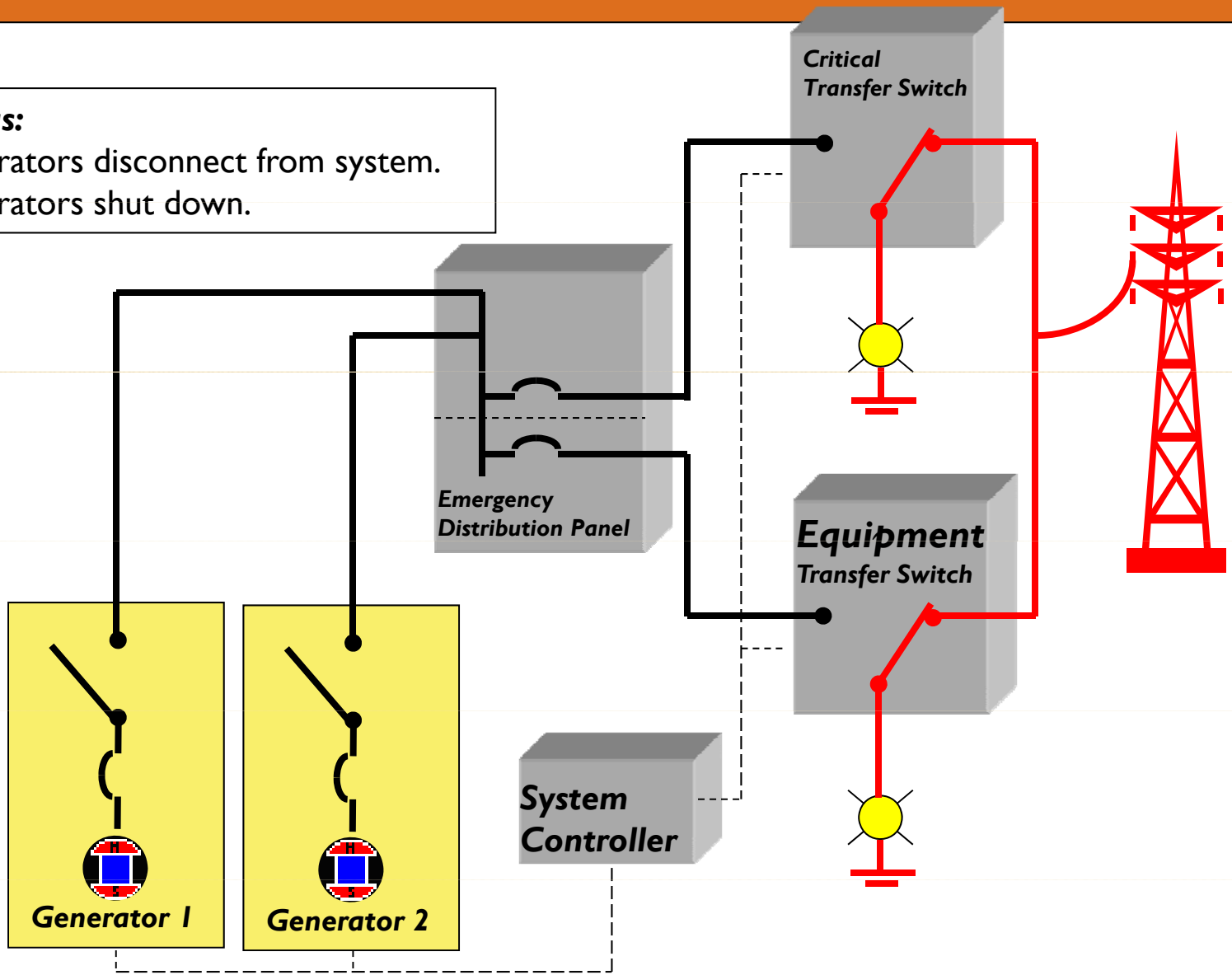

Paralleling Advantages

Paralleling
Vs.
Signal Generator

Reliability
Scalable
Cost
Footprint
Serviceability

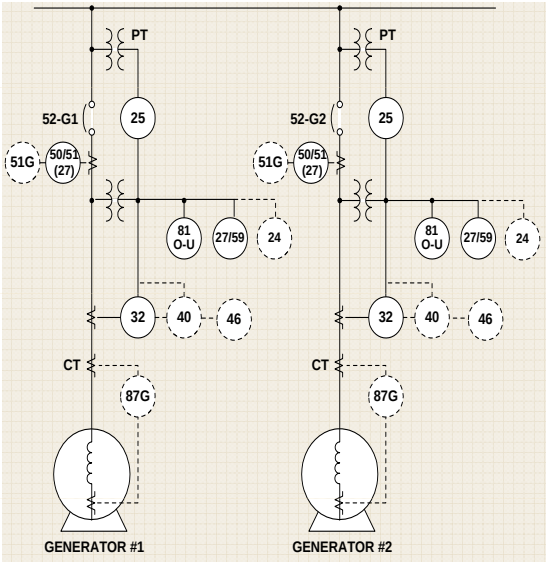

Reliability

Accepted market reliability for single unit
- 98 to 99% (multiple third party references)

Integrated paralleling adds redundancy
- Typical load factors
- Minimal load shedding / management
- Results in redundancy without increasing generator capacity
  - N+1 reliability (99.96 to 99.99%)
  - N+2 reliability (99.9992 to 99.9999%)

Vs.

Scalability

Start with a single generator
Planned growth
Unanticipated growth
Lower initial investment
Budget / capital constraints
Protection against uncertainty

Single generator implementations offers no cost effective expansion capabilities – This solution typically uses sizing safety factors to protect against uncertainty and load growth.

Cost of Installation/Ownership

- Integrated Paralleling /Single Generator's Cost
  - Capital cost
    - Optimizing market engine pricing (high volume engines)
  - Installation cost
    - Same amps, same distance
    - Potential for smaller cabling (NEC 800 amp breaker roundup rule)
    - Potential crane reduction (40 ton vs. 80 ton)
    - Pad thickness reduction (6" vs. 10-12")
  - Maintenance cost
    - More manageable fluids
    - Comparable consumables
    - "Ask for PM quotations for both options"

Capital Cost - Traditional

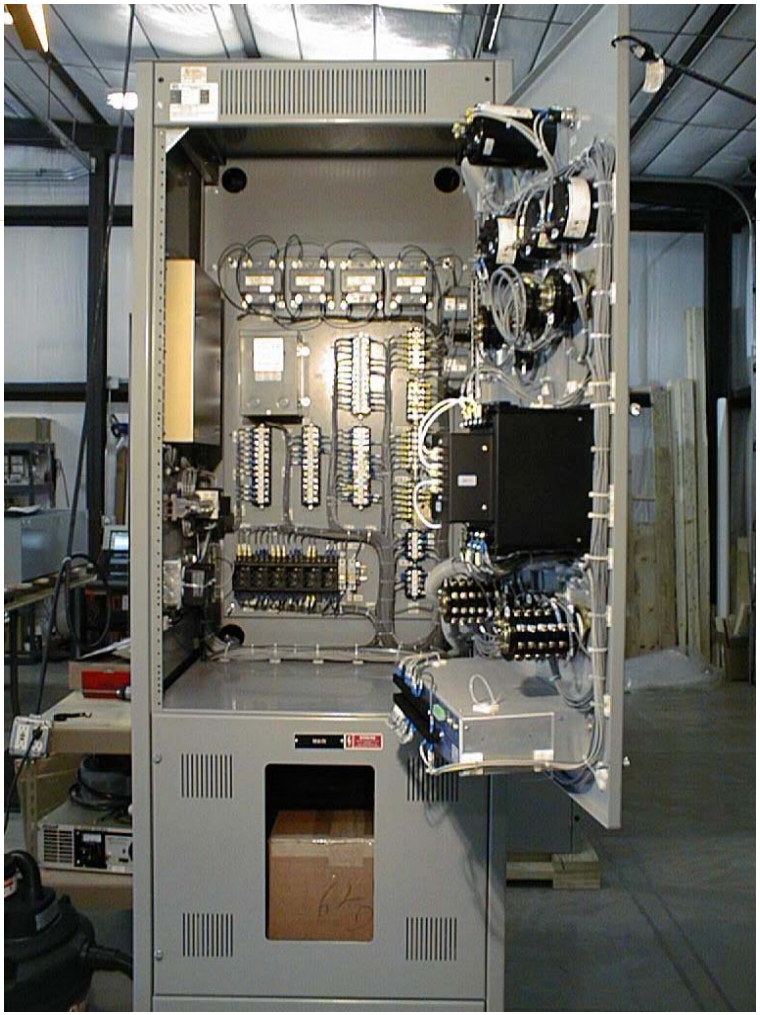

Capital Cost - Integrated

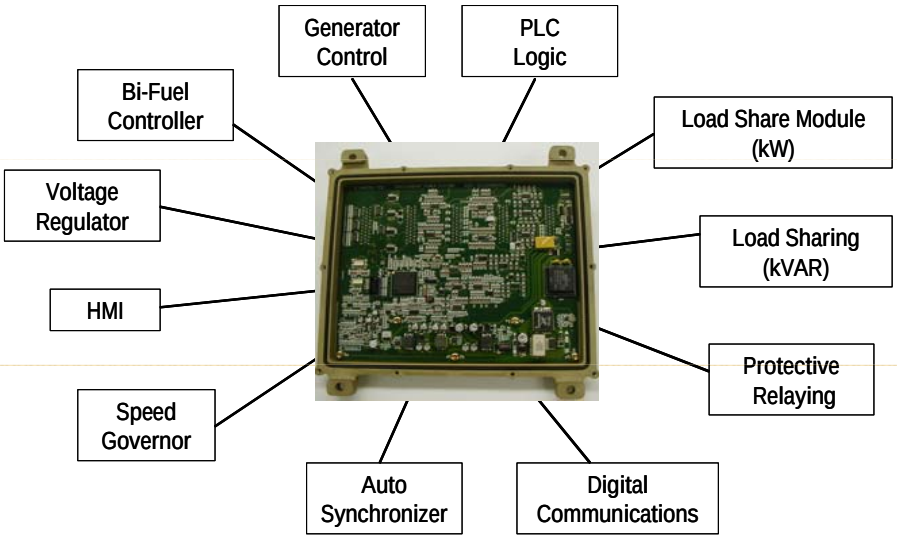

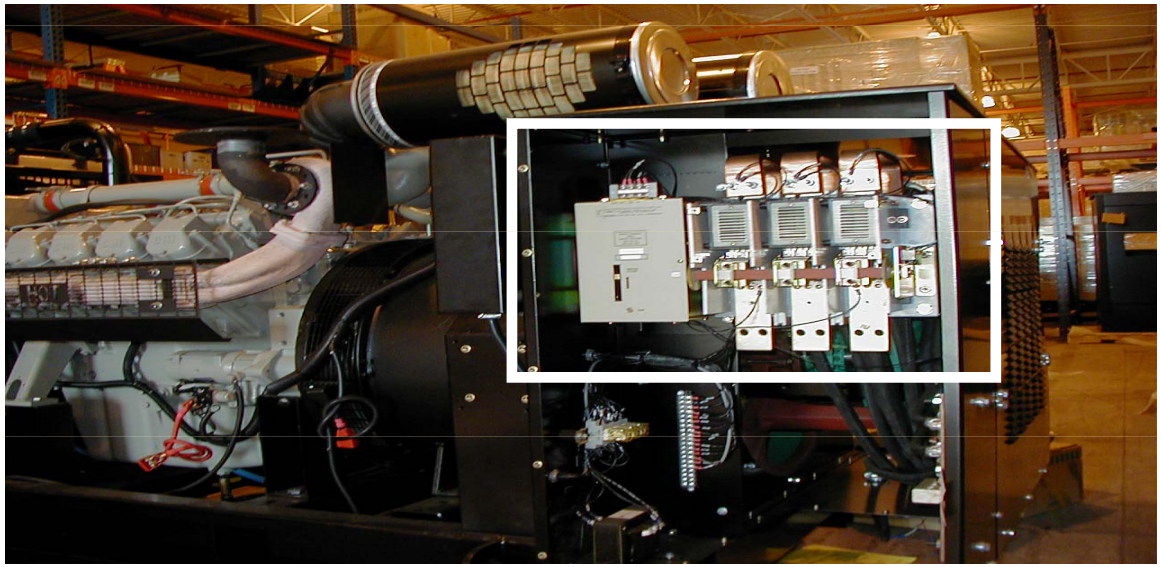

Footprint

Foot Print Size vs. Location Flexibility

- Foot print examples
  - 1000kW (26.1' x 8.4')
  - 2 x 500kW (19.2' x 13.5')

  - 1500 kW (33.3' x 8.4')
  - 2 x 750 kW (16.9' x 16.5')

- Location flexibility
  - Various layouts
  - Units can be separated
  - Parking garages
  - Rooftops

Serviceability

Single generator implementations
- Limited to no protection while servicing

Can your critical loads go without protection?
- Oil & coolant changes
- Belts, hoses, batteries
- Load bank connection
- Minor repairs
- Major repairs

At what point do you bring in a rental?
- Change-over time

Paralleled implementations provide protection during servicing

Conclusion

- Traditional
- Integrated
- Scalability
- Serviceability
- Reliability