Tier 4 Presentation
4/27/10

Presented by Armen Kludjian

Tier 4

- Tier 4 interim is the EPA Emissions Standard coming into effect January 1, 2011.

EPA Non-Road Regulations

- 1990 – Congress & President Bush sign the Clean Air Act Amendments
  - United States Environmental Protection Agency (EPA) to regulate exhaust emissions from new non-road engines
    - Reduce ozone by controlling NOx and HC
    - Reduce acid rain by controlling NOx and sulfur dioxide
    - Improve air quality
- Tier 1 regulations implemented in 1996
- Tier 2 phased-in 2000 – 2006
- Tier 3 phased-in 2005 – 2008
- Tier 4 is the next step …….

EPA Nonroad Diesel Emissions Limits and Timing

bkW	2006*	2007	2008	2009	2010	2011	2012	2013	2014	2015
< 8	7.5 / 8.0, .80		7.5 / 8.0, .40		7.5 / 8.0, .80					
≥8 < 19	7.5 / 6.6, .80		7.5 / 6.6, .40							
≥19 < 37	7.5 / 5.5, .60		7.5 / 5.5, .30					4.7 / 5.5, .03		
≥37 < 56 Option 1	7.5 / 5.0, .40		4.7 / 5.0, .30					4.7 / 5.0, .03		
≥37 < 56 Option 2	7.5 / 5.0, .40		4.7 / 5.0, .40				4.7 / 5.0, .03			
≥56 < 75	7.5 / 5.0, .40		4.7 / 5.0, .40				3.4, .19 / 5.0, .02			.40, .19 / 5.0, .02
≥75 < 130	6.6 / 5.0, .30	4.0 / 5.0, .30					3.4, .19 / 5.0, .02			.40, .19 / 5.0, .02
≥130 < 225	4.0 / 3.5, .20					2.0, .19 / 3.5, .02			.40, .19 / 3.5, .02	
≥225 < 450	4.0 / 3.5, .20					2.0, .19 / 3.5, .02			.40, .19 / 3.5, .02	
≥450 ≤ 560	4.0 / 3.5, .20					2.0, .18 / 3.5, .02			.40, .19 / 3.5, .02	
>560 Non Genset	6.4 / 3.5, .20					3.5, .40 / 3.5, .10				3.5, .19 / 3.5, .04
>560 ≤ 900 Genset	6.4 / 3.5, .20					3.5, .40 / 3.5, .10				.67, .19 / 3.5, .03
>900 Genset	6.4 / 3.5, .20					.67, .40 / 3.5, .10				.67, .19 / 3.5, .03

NOx, HC / CO, PM or NOx+HC / CO, PM — g/kW-hr

Tier 2 · Tier 3 · Tier 4 Interim · Tier 4 Final

*EPA Nonroad Regulations commenced with Tier 1 in January 1996

EPA Non-Road Regulatory Impact

Example - >900 bkW genset applications

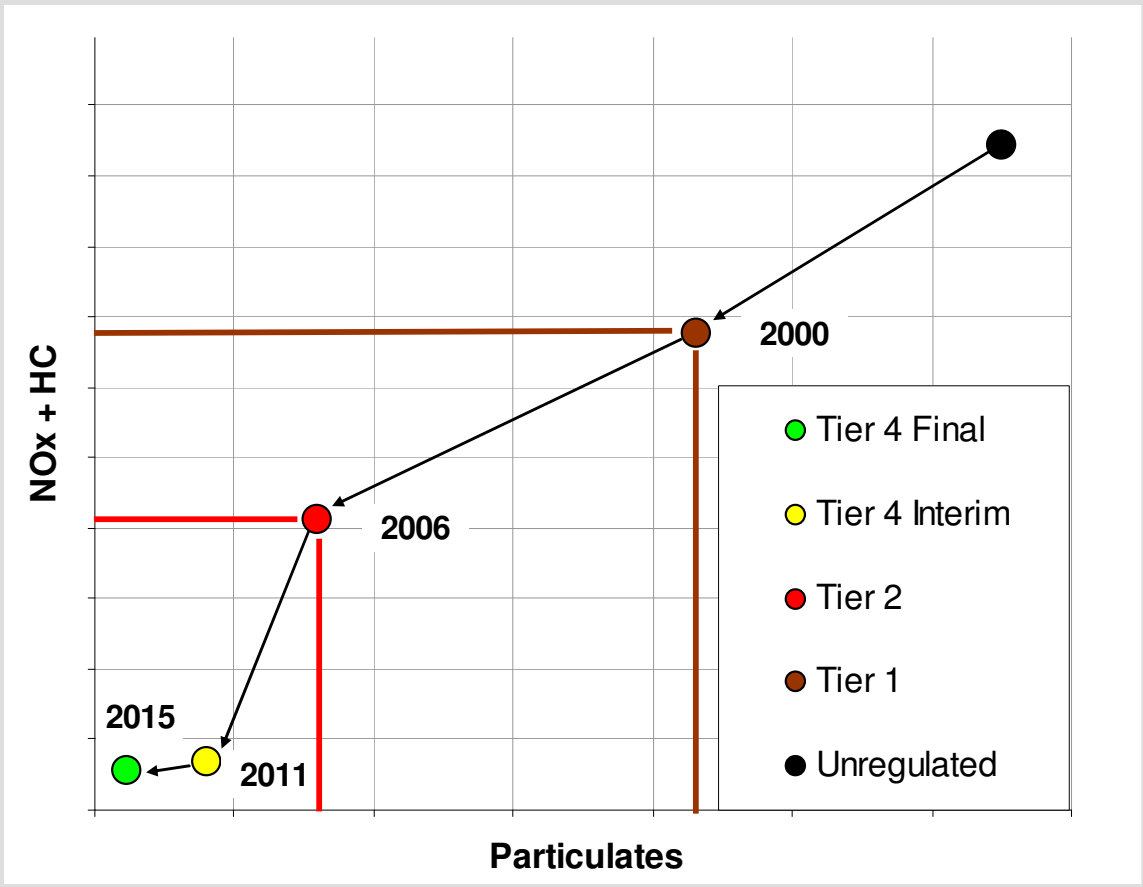

Diesel Emissions

Diesel engines emit:

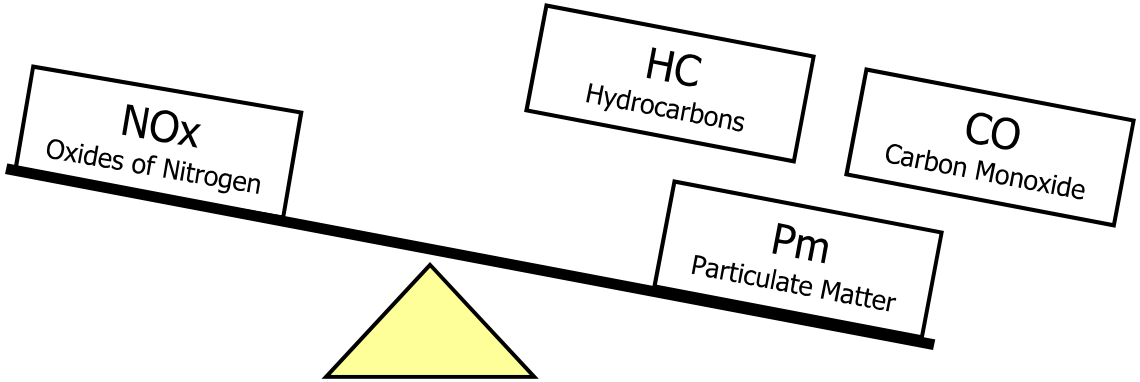

- Emphasis is on NOx and PM
- NOx and PM act as tradeoffs during combustion
  - HC and CO can also increase due to in-cylinder NOx reduction
- During combustion, the sulfur in fuel converts to S02

Tier 4 Emissions levels > 900bkw

- Nox = 0.67 (83% reduction from Tier 2)
- HC = 0.40 (83% reduction from Tier 2)
- CO = 3.5
- PM = 0.10 (50% reduction from Tier 2)

How Will this Effect Current Permits?

- Tier 4 does not change existing permits
- Permits normally cover all emitters within a contiguous site
- Adding emitters may cause standards to be updated

EPA – CARB – ATCM – BAAQMD

- Environmental Protection Agency = Federal
- California Air Resources Board = State
- **A**irborne **T**oxic **C**ontrol **M**easure = State
- Bay Area Air Quality Management District = 7 Bay Area Counties

California

- ATCM For Stationary Engines
  - **Emergency engines effectively align with EPA Non-Road non-exemption limits**
  - Enforces PM limits of 0.15 g/bhp-hr (0.2 g/bkw-hr) or EPA Non-Road limit – whichever is lowest
  - Only allows 50 hours non-emergency operating & maintenance unless PM <=**0.01** g/bhp-hr (0.0134 g/bkW-hr)
  - Allows for compliance demonstrations other than certification by the manufacturer.
  - Non-emergency engines must meet PM<=**0.01** g/bhp-hr (0.0134 g/bkW-hr) – half of the Tier 4 Final limits

Two EPA designations for certified Tier 4 Power Products

- Stationary Emergency Use
  - 100 hours discretionary use
  - Exhaust aftertreatment not required

- Stationary Non-Emergency Use
  - Exhaust aftertreatment will be required for most engines

Tier 4 <u>Non-Emergency</u> will be required if

- Non-emergency standby units
- Prime Power applications
- Load management / peak shaving
- Electric Power Rental units
- Storm Avoidance

Pending Regulatory Changes

- The California ATCM for Stationary Internal Combustion Engines imposes emission standards for emergency engines installed after 2010 (and the expiration of sell-through provisions) that are **more stringent than what is mandated through similar federal regulations**. In some cases, the standards imposed by the ATCM would result in the use of NOx emission control devices (Selective Catalytic Reduction) that may not be suitable for emergency engines. CARB is investigating the need for regulatory amendments that would allow the continued installation of emergency engines meeting model year 2010 emissions standards, combined with the with the use of PM filters.

Inventory Sell-through

- For dealers with existing inventory
  - Engines built in 2010
- Final assembly
  - In 2010
- Sale
  - In 2010
- Permit
  - By June 30, 2011

Technology Portfolio

- 130 to 560 bkW
  - NRS
- 560 to 900 bkW
  - DOC
  - Auto Regen. DPF
- 900 and above
  - DOC
  - SCR

Cat NOx Reduction System (NRS)

- < 20% of exhaust gas is diverted from the exhaust stream then cooled before entry back to the engine.

- Working principle
  - Non-combustible (inert) gas is diverted pre-turbo
  - Combustion air is diluted with inert gas
  - Inert gas lowers combustion temperature, thereby reducing NOx production
  - The Cat NOx Reduction System will be monitored by a Mass Flow Sensc

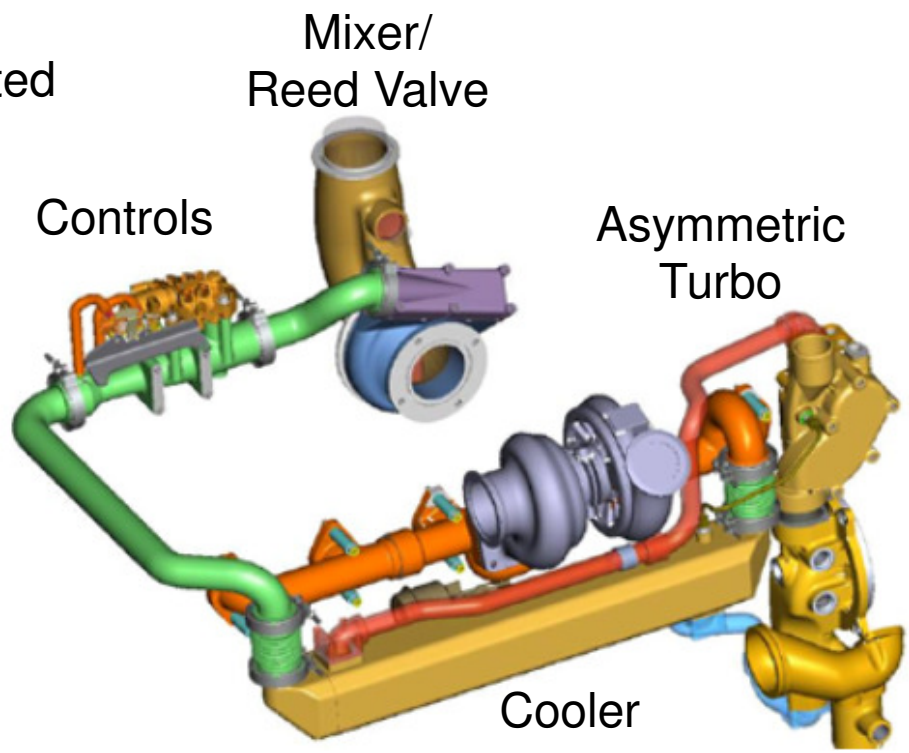

Clean Emissions Module

CEM – (DOC + DPF)

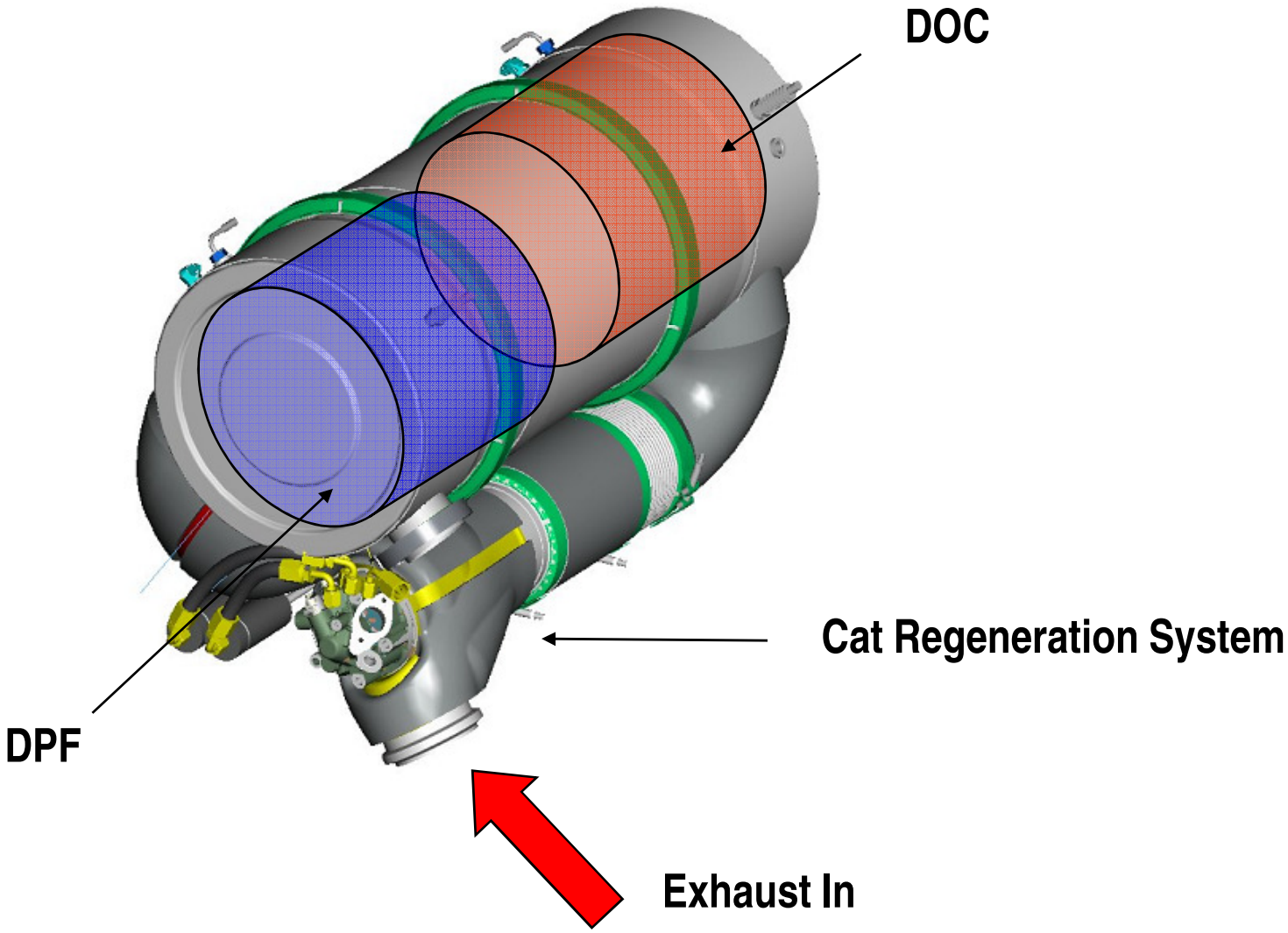

Technology ►130 - 560 bkW

- NOx Reduction System + Clean Emissions Module
  - ➢Automatic DPF regeneration – maximizing uptime

Technology ►560 - 900 bkW

- NOx Reduction System
  - ➢Engine only, proven technology: ACERT + additional air management

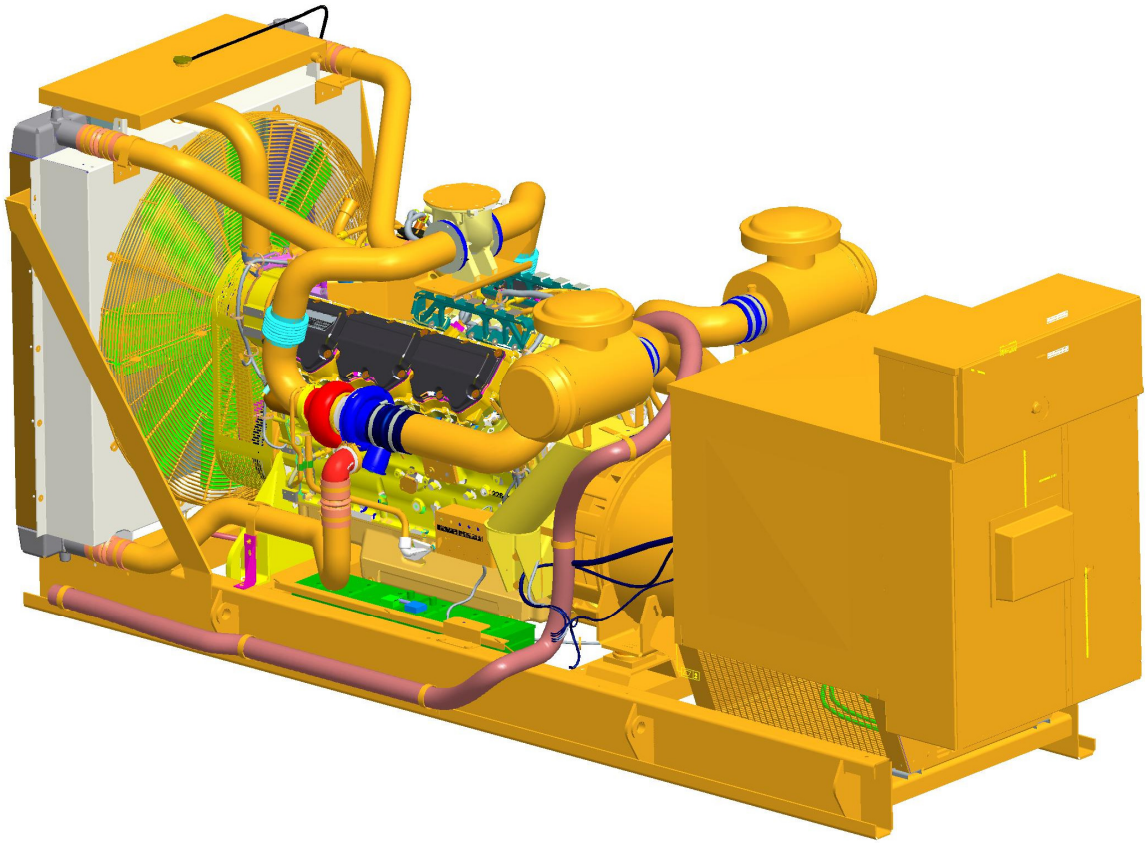

800 ekW (C27) – Open Gen Set

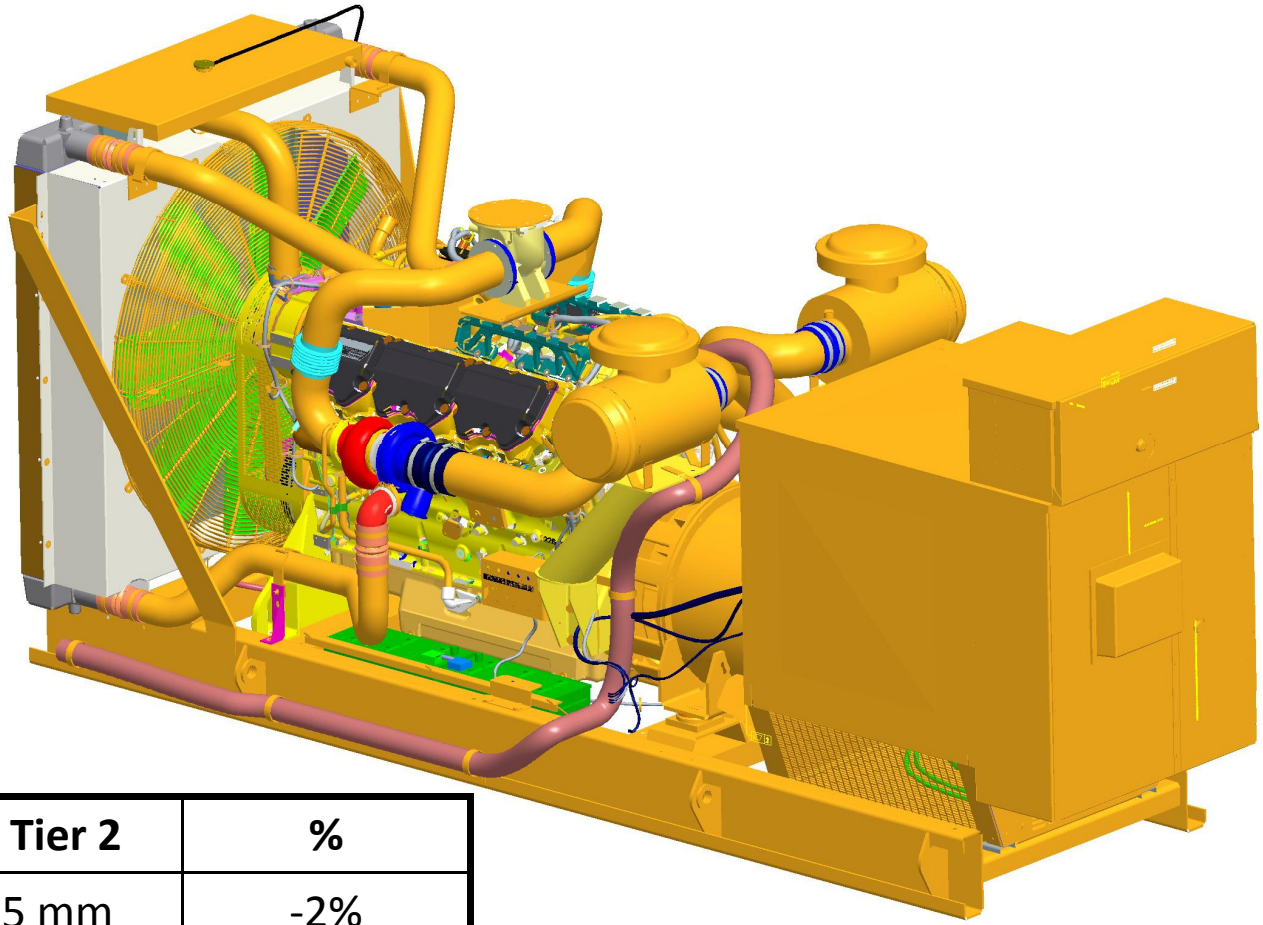

	Vs Tier 2	%
Length	-85 mm	-2%
Height	+56 mm	+3%
Width	+89 mm	+5%

Technology ►900+ bkW

- Clean Emissions Module
  - Engine + PM and NOx Aftertreatment (DOC and SCR)
  - Uses Diesel Exhaust Fluid (DEF) and air injection system
  - Optimized for Cat generator sets - designed specifically for Cat engines (catalyst size, exhaust flow, noise characteristics)
  - Reliable, compact, light weight – designed with mobile applications in mind
  - Flexible configuration

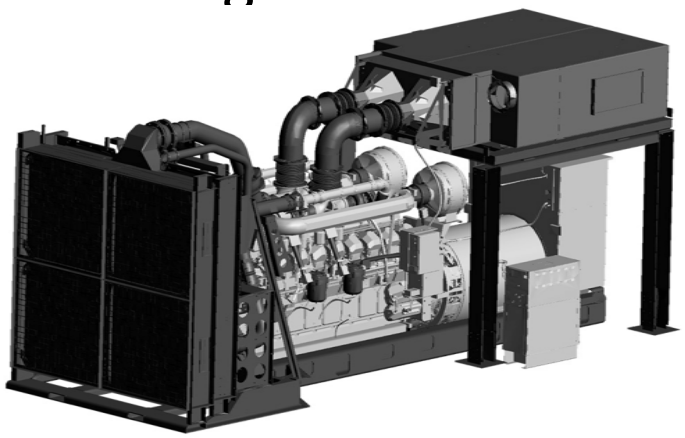

2000 & 2500 ekW (3516CHD) - Open Genset

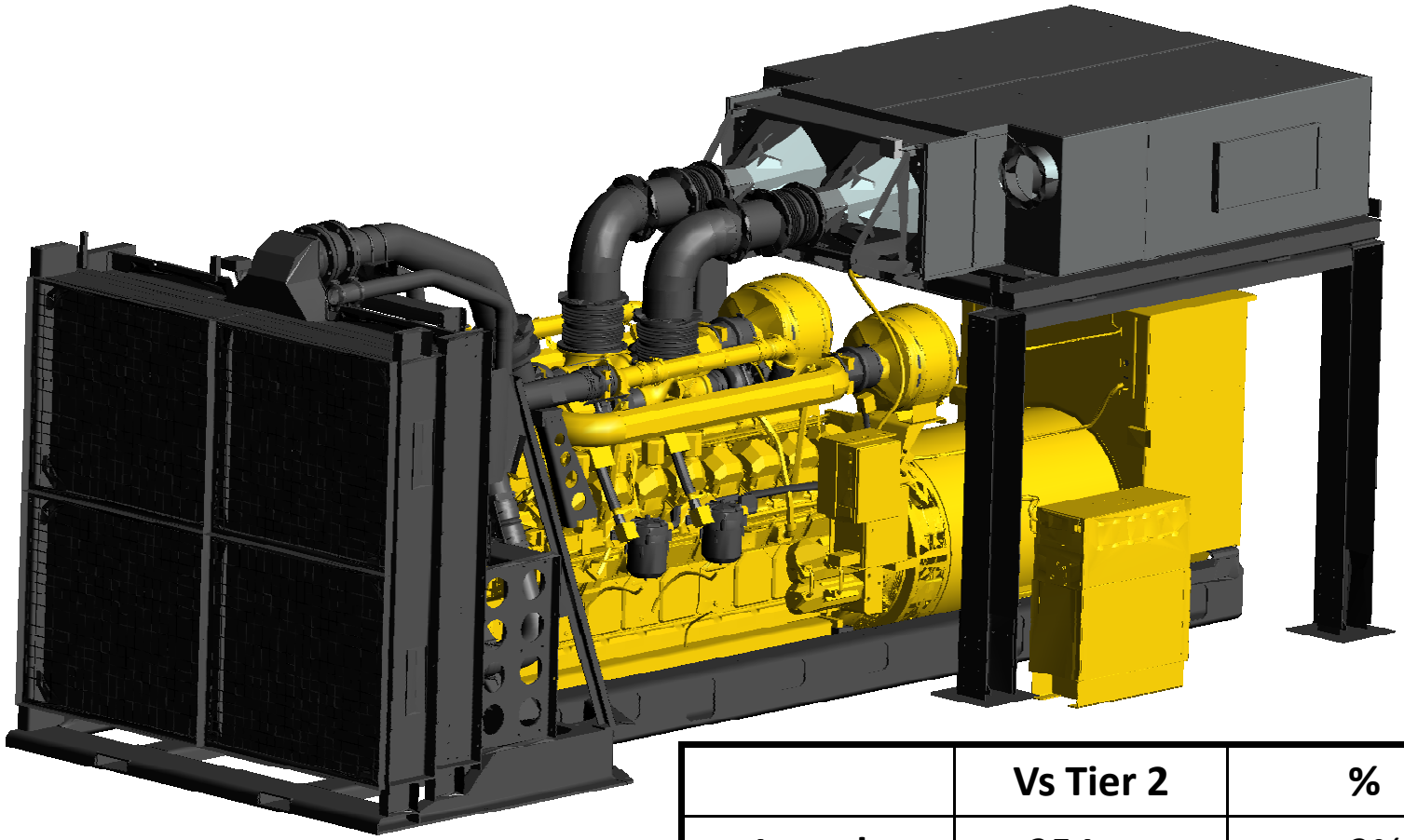

	Vs Tier 2	%
Length	+254 mm	+3%
Height	-188 mm	-6%
Weight	+1900 kg	+10%

Certified Aftertreatment Product

CEM - SCR

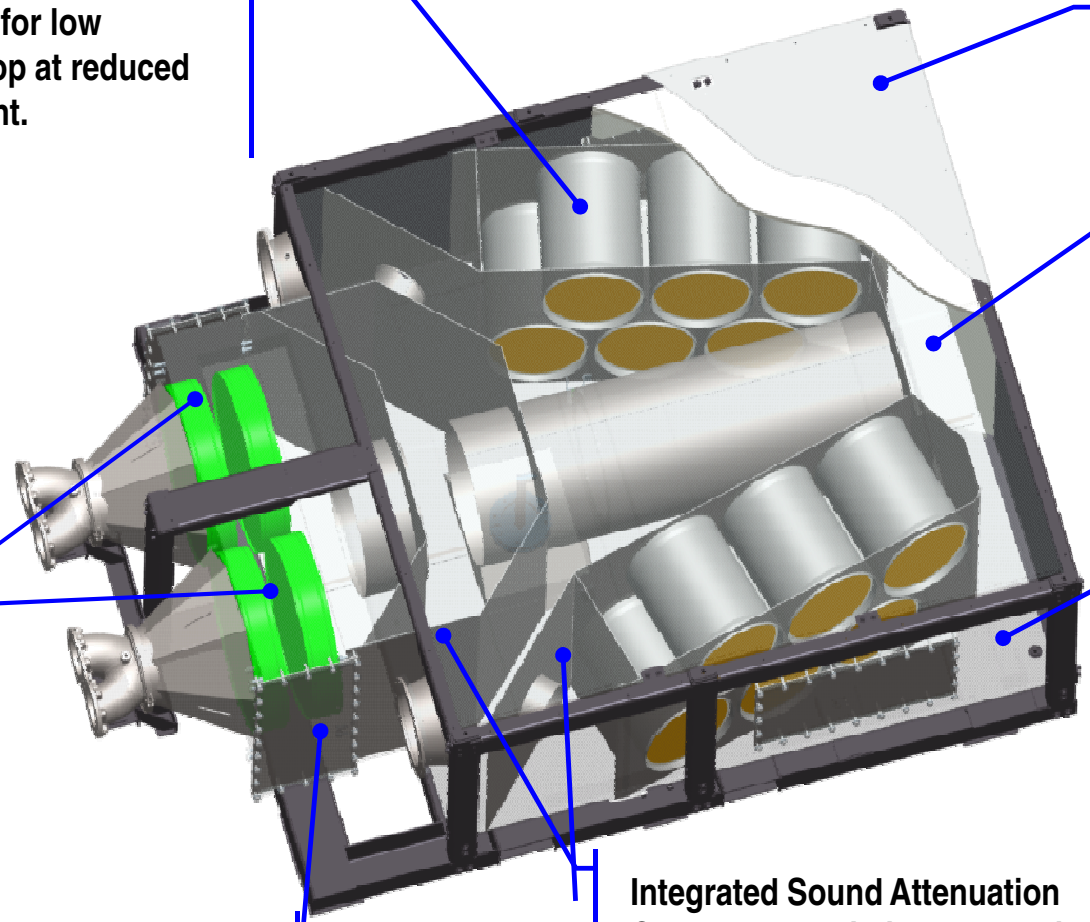

Dual-bank round ceramic SCR design for low pressure drop at reduced cost & weight.

Dual-wall insulation for thermal protection

Wraparound flow path gives long mixing tube - time for DEF to decompose

DOC

Thin wall stainless with mild steel external support structure to minimize cost & weight

Access to key service items

Integrated Sound Attenuation Chambers maximize space with minimal cost & backpressure impact

Selective Catalytic Reduction

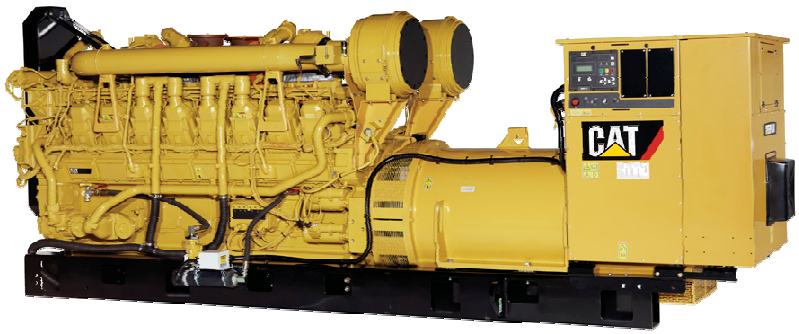

ENGINE / GENSET

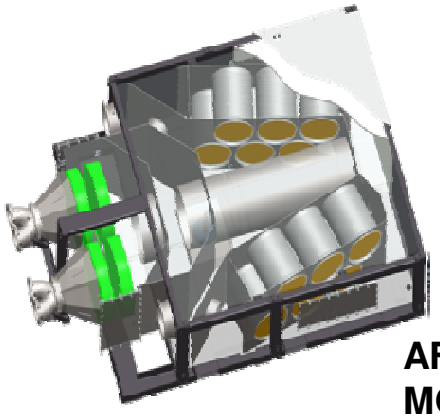

AFTERTREATMENT MODULE

DEF TANK

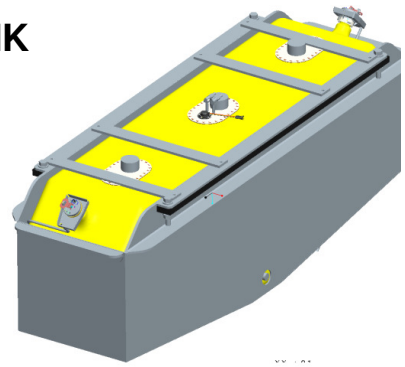

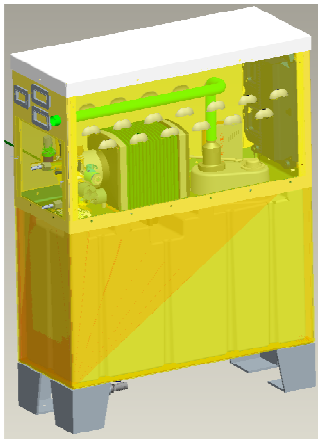

DOSING CABINET & BUFFER TANK

Air Source

The next size bigger may be cheaper

- In some cases it may cost more money to build an emissions compliant engine than the next size larger.
- This is due to varying emissions levels in the regulations as shown in the previous charts.
- In those cases the manufacturer may not make certified product available.

Phased introduction

- While it is our goal to have all Tier 4 product available in 2011, we may not have all sizes that we intend to build available in the first quarter.

Compliant Product

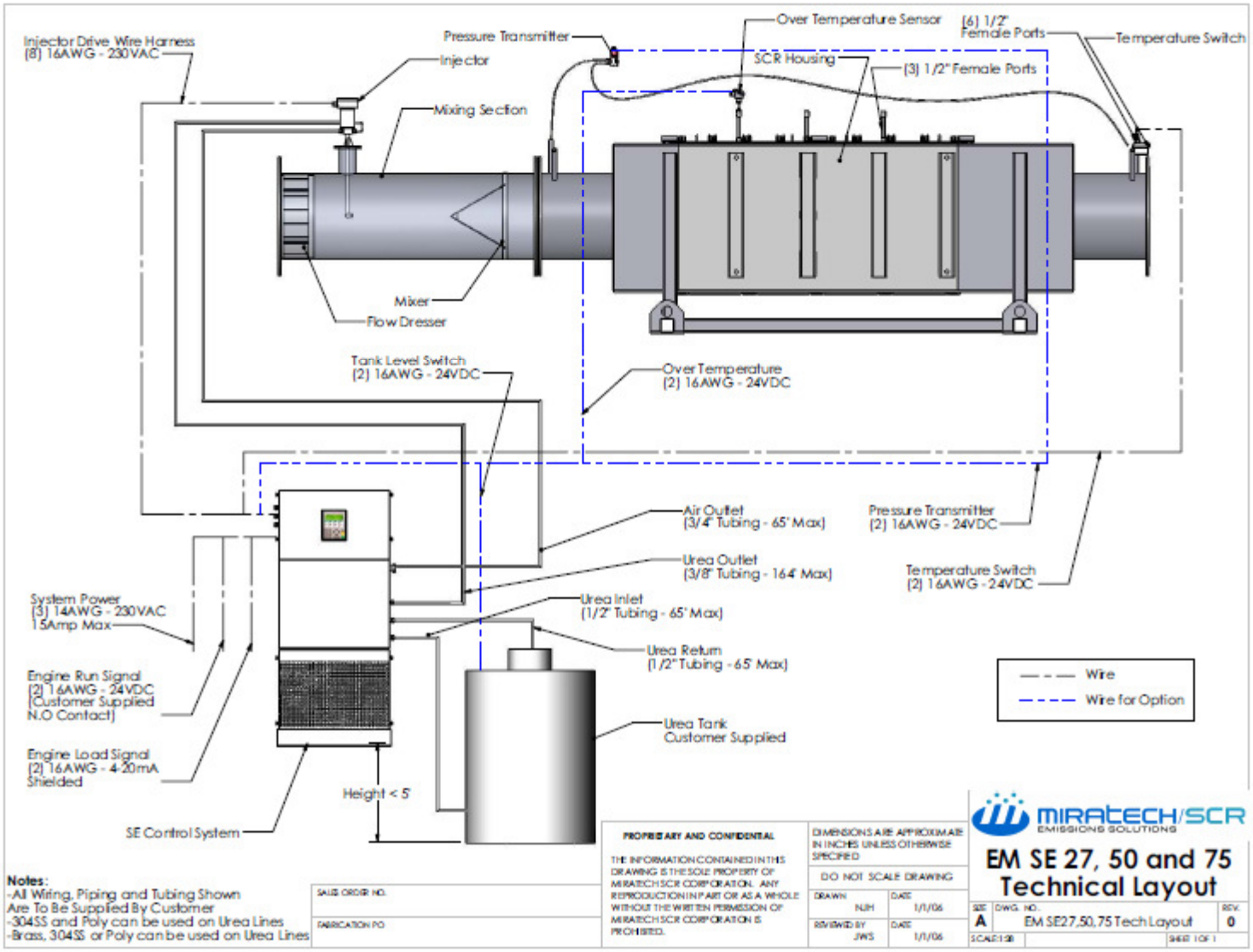

SCR

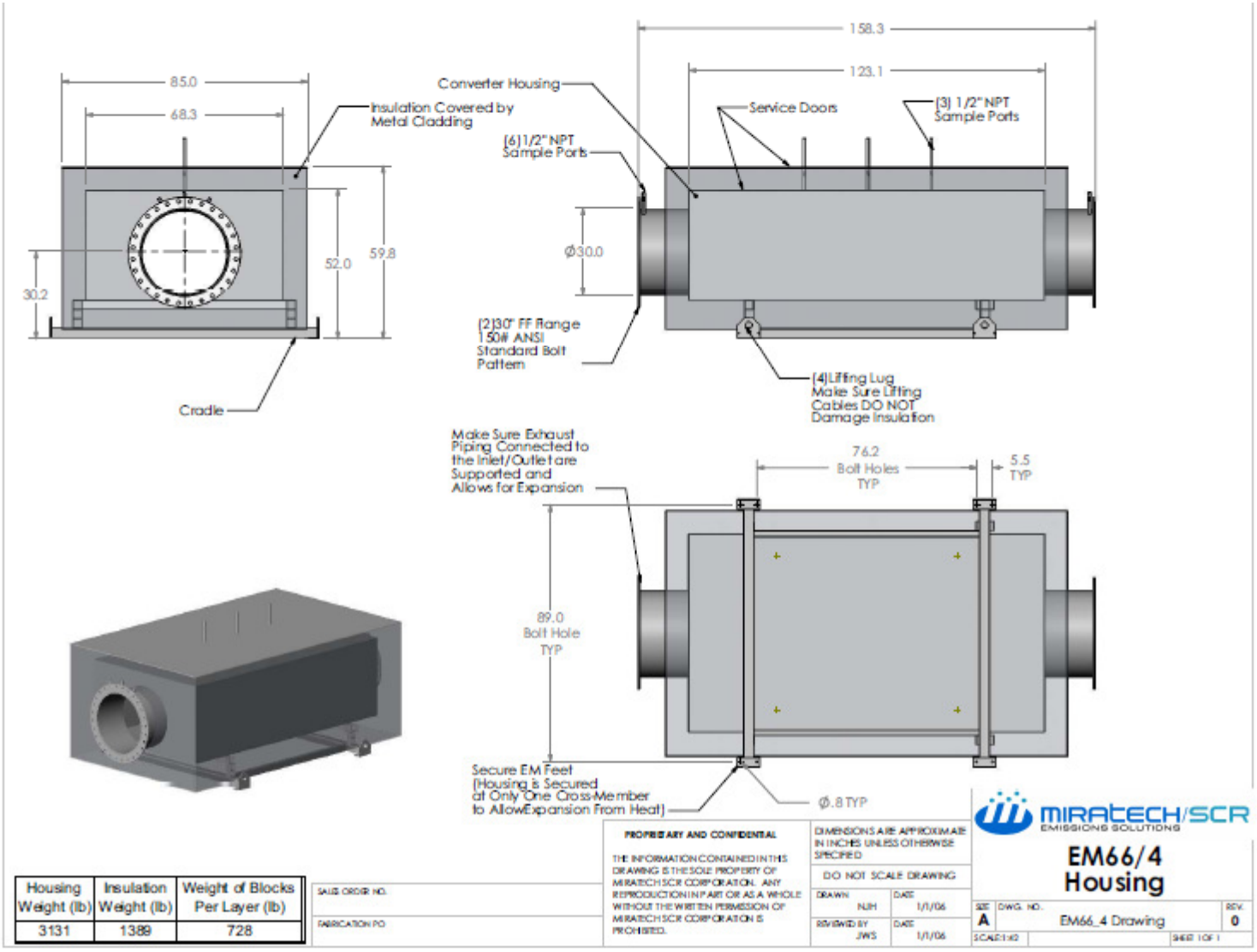

Housing Weight (lb)	Insulation Weight (lb)	Weight of Blocks Per Layer (lb)
3131	1389	728

Dosing System

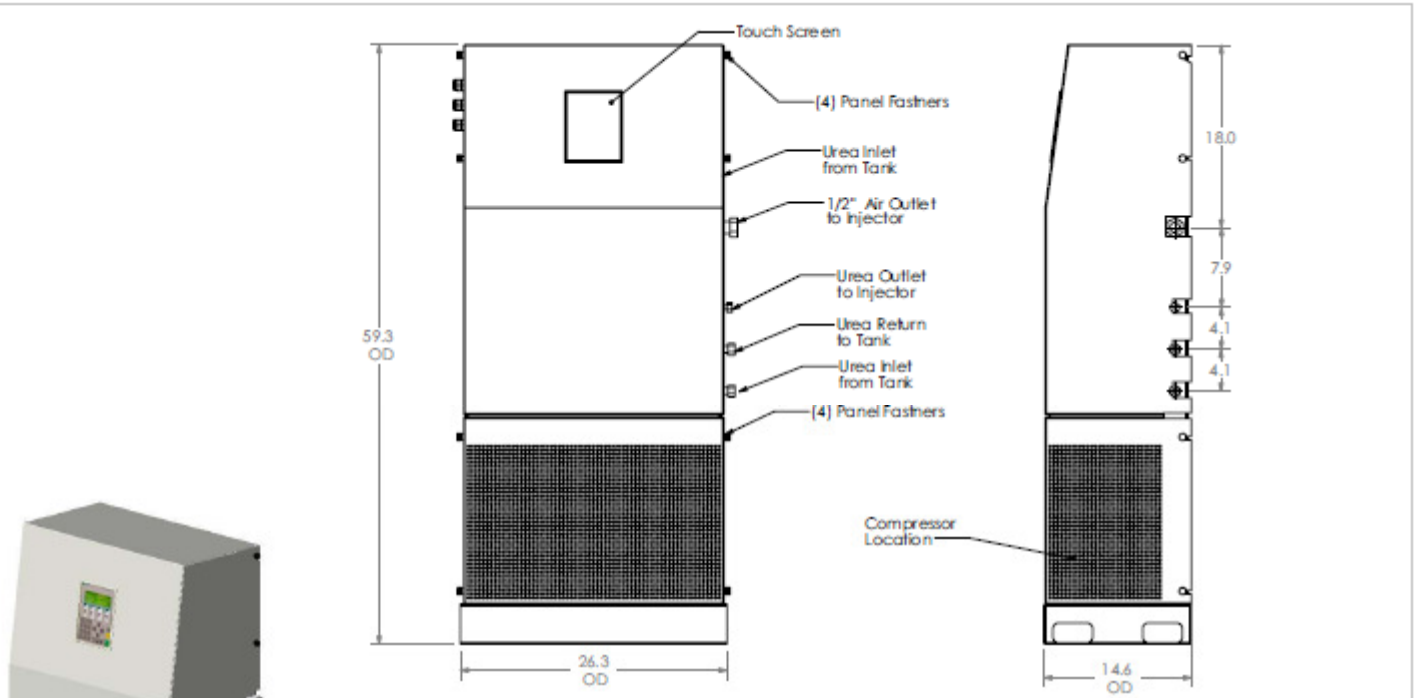

	SE27	SE50	SE75	SE115
OUTPUT (l/h)	5-27	10-50	15-75	25-115
POWER (kw)	0.7	1.3	1.3	2.2
VOLTAGE@60Hz AC	230	230	230	230
TEMPERATURE (F)	32-104	32-104	32-104	32-104
STORAGE TEMPERATURE (F)	0-140	0-140	0-140	0-140
WEIGHT (lbs)	309	331	331	353
SIDE CLEARANCE (inch)	11.8	11.8	11.8	11.8
TOP CLEARANCE (inch)	19.7	19.7	19.7	19.7

SALES ORDER NO.

FABRICATION PO

PROPRIETARY AND CONFIDENTIAL

THE INFORMATION CONTAINED IN THIS DRAWING IS THE SOLE PROPERTY OF MIRATECH SCR CORPORATION. ANY REPRODUCTION IN PART OR AS A WHOLE WITHOUT THE WRITTEN PERMISSION OF MIRATECH SCR CORPORATION IS PROHIBITED.

DIMENSIONS ARE APPROXIMATE IN INCHES UNLESS OTHERWISE SPECIFIED

DO NOT SCALE DRAWING

DRAWN NJH DATE 1/1/06

REVIEWED BY JWS DATE 1/1/06

MIRATECH/SCR EMISSIONS SOLUTIONS

SE 27-115 Controller

SIZE A DWG. NO. SE 27-115 Drawing REV. 0

SCALE:1:14 SHEET 1 OF 1

Mixing Section

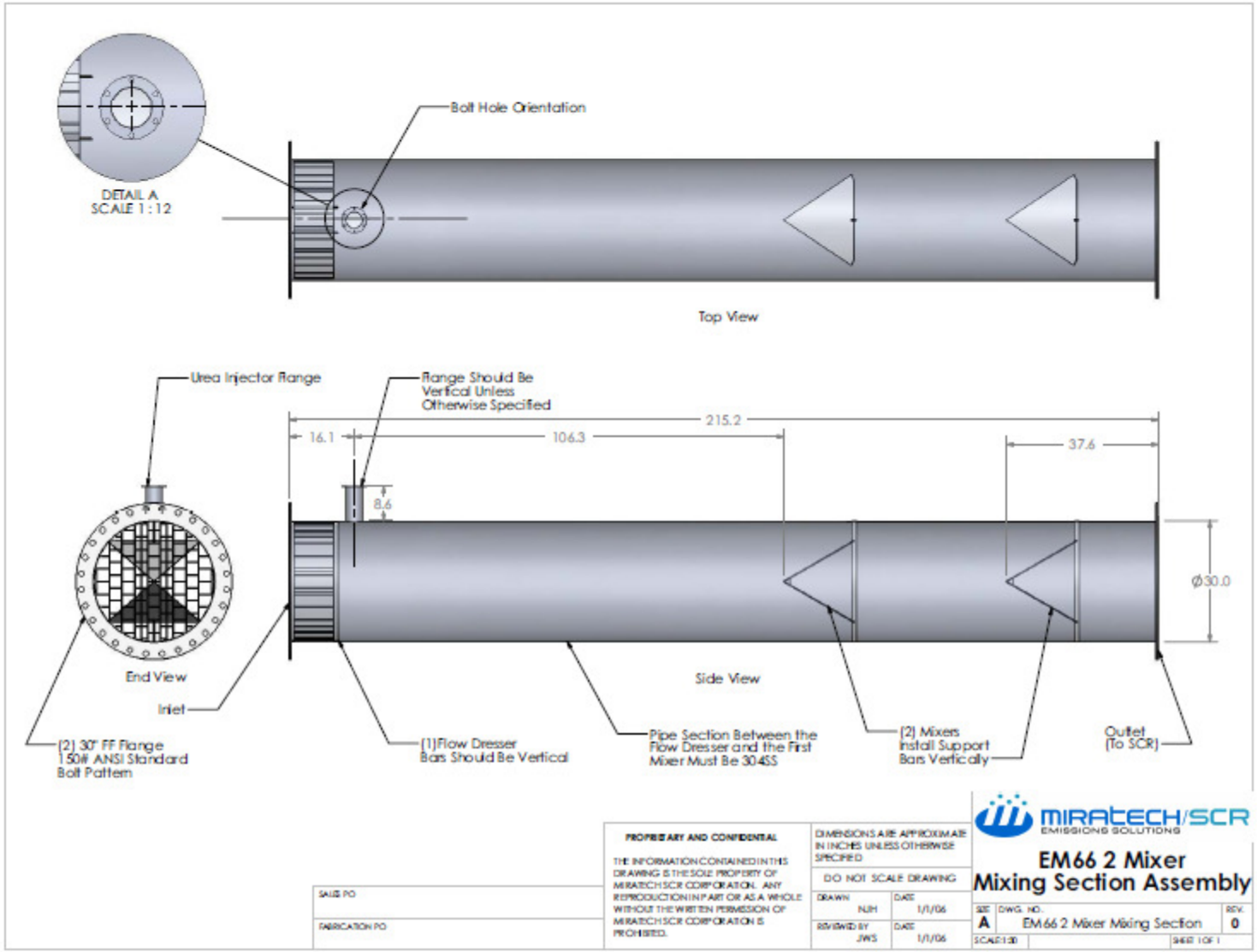

Tier 4 – Stationary Emergency Definition

- “Emergency” effectively means no running except when normal source, or utility power is not available
- No limit to emergency running time
- Maintenance & testing limited to 100 hours per year
- Operator must record use & reference to hours meter

Certified Genset vs. Compliant

- Certified Product
  - Is required for all Non-Emergency use in all 49 states
- Compliant Product
  - For use in Stationary Emergency in California only
  - Source testing usually required

Thank you

- This presentation will be available at:

http://www.petersonpower.com/products/power_generation.php