Passive Intermodulation Distortion, Part 2

Michael Steer
with
Greg Mazzaro
and Josh Wetherington

Copyright 2009 to 2011 by M. Steer, G. Mazzaro, and Josh Wetherington
Not to be posted on the web or distributed electronically without permission.

Outline

- Background
- Passive Intermodulation Distortion (2 parts)
  - Part 1, PIM effects, Electro-Thermal PIM
    - Test Equipment, Microwave Circuits / Antennas
  - Part 2, PIM effects
    - Non Electro-Thermal PIM, Filter PIM
- Behavioral Modeling
  - Behavioral model
  - Measurement Equipment
- Simulation and Modeling of Large Systems
  - Part 1, New circuit concepts
  - Part 2, fREEDA

PIM Measurement System (Analog Canceller)

Problem

- Need to measure small signals in the presence of large signals.
  - E.g. GPS receiver, radar, distortion measurement

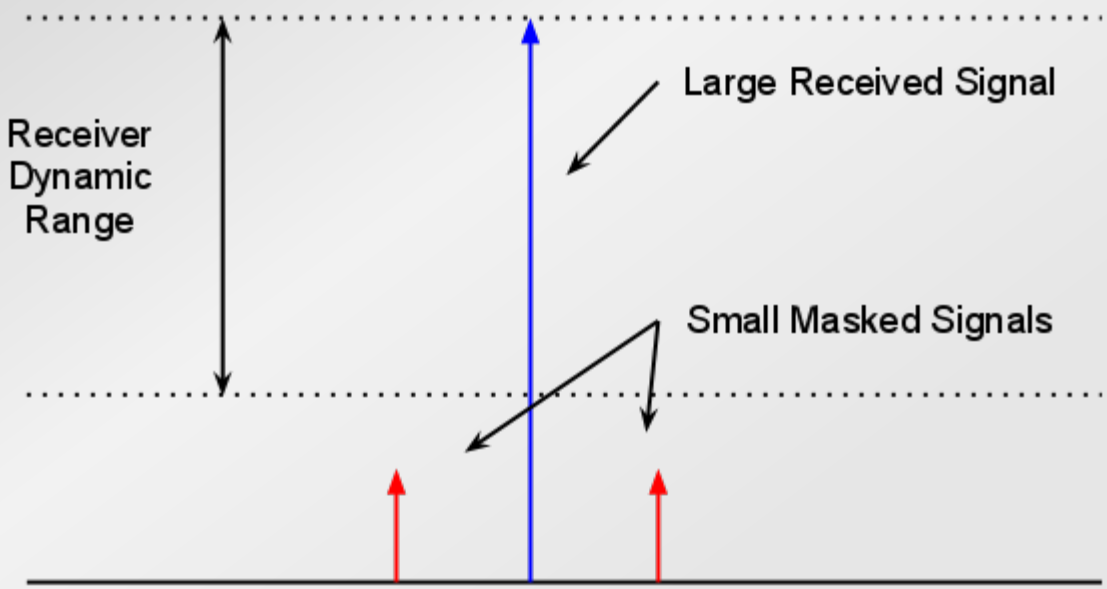

Cancellation Theory

- Sum with equal amplitude/anti-phase signal of original signal

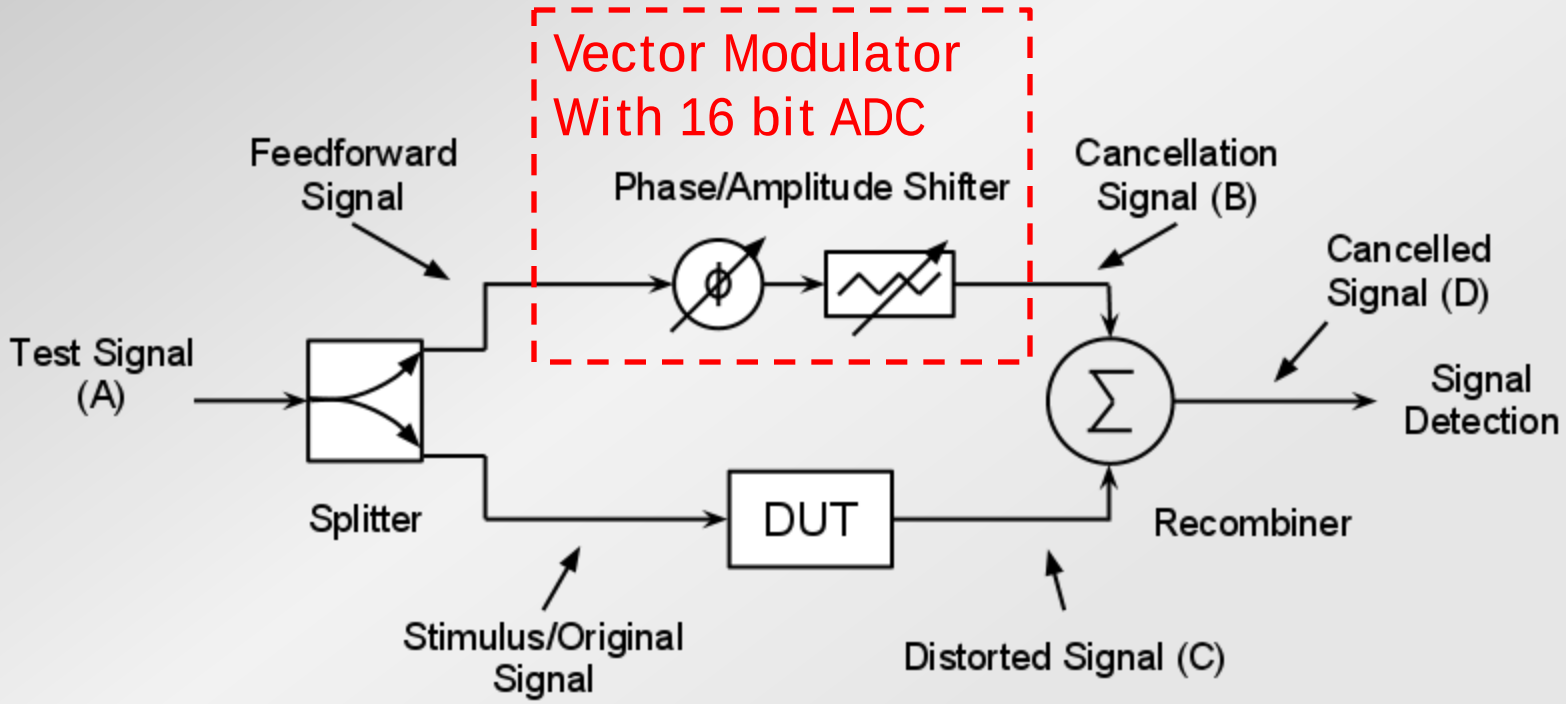

Cancellation Theory

- Amplitude Measurements Only
- Non Newton-Based Iteration

Cancellation Errors

- Phase error:
  - Mostly result of errors in β and α in θ_S equation
  - Dependent on phase separation of signals
  - Can be minimized in iteration
- Amplitude error:
  - Results from path non-linearities
  - Dependent on phase, frequency, time
  - More sensitive than phase errors due to sole reliance on amplitude measurement
  - Minimized through path amplitude calibration

Amplitude Calibration

- Standard (baseline): Generate calibration matrix: Ampl. vs. Freq.
  - Occurs pre-test
  - Does not capture time-dependent or phase-dependent effects
  - Only needs to be done once (ideally)
  - Speed depends on density of matrix
  - Inherent interpolation error
- In-line: Perform calibration on-the-fly
  - Occurs during cancellation
  - Minimizes time-dependency
  - Very fast: single measurement
  - No interpolation error

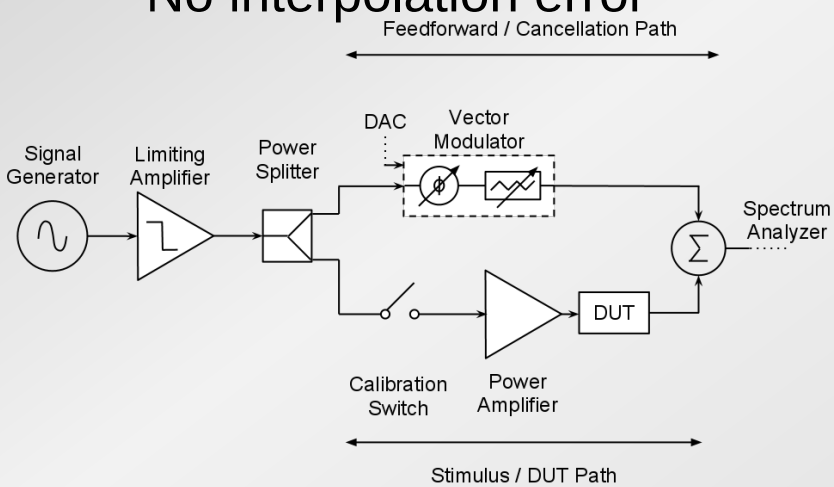

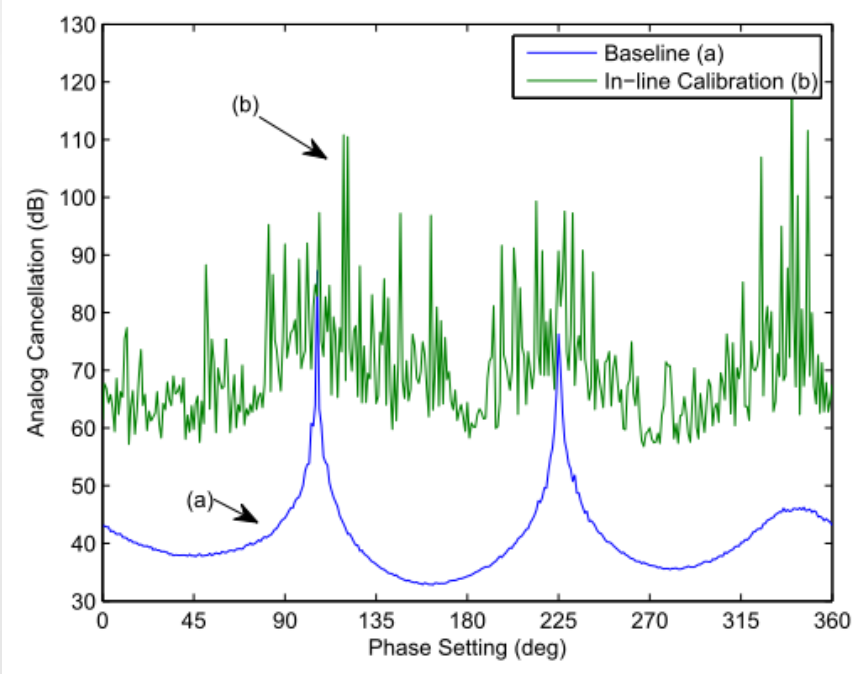

Analog Cancellation

- Initial cancellation is statistical
  - Cancellation converges to 70-90 dB

Target C_T (dB)	Iterations				Meas. analog cancellation (dB)			
	Av.	Max	Md.	σ	Av.	Max	Min	σ
0	1.00	1	1	0.00	45.0	69.7	27.3	9.5
30	1.01	2	1	0.12	46.4	79.3	31.2	10.4
40	1.31	2	1	0.46	56.9	84.5	40.5	13.3
50	1.72	3	2	0.48	67.0	84.5	50.3	10.0
60	2.01	4	2	0.49	73.5	87.6	62.5	4.9
70	2.63	11	2	1.24	75.3	90.0	70.3	4.0
–	Forced 2 Iter.				68.6	85.8	48.3	8.7

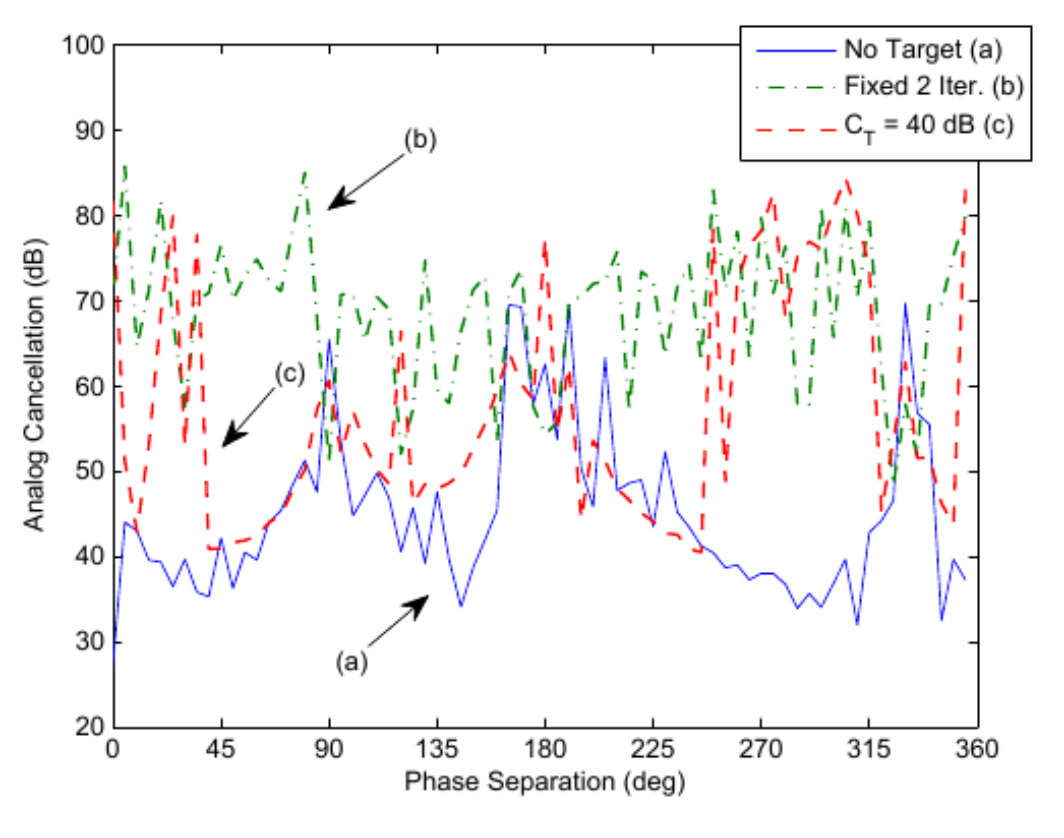

High Dynamic Range Measurement

- Cancellation Dynamic Range (DR_C):
  - Ratio of the highest-power signal that can be cancelled to the minimum detectable signal (MDS) after cancellation
  - Not simple combination of C_A and DR_R

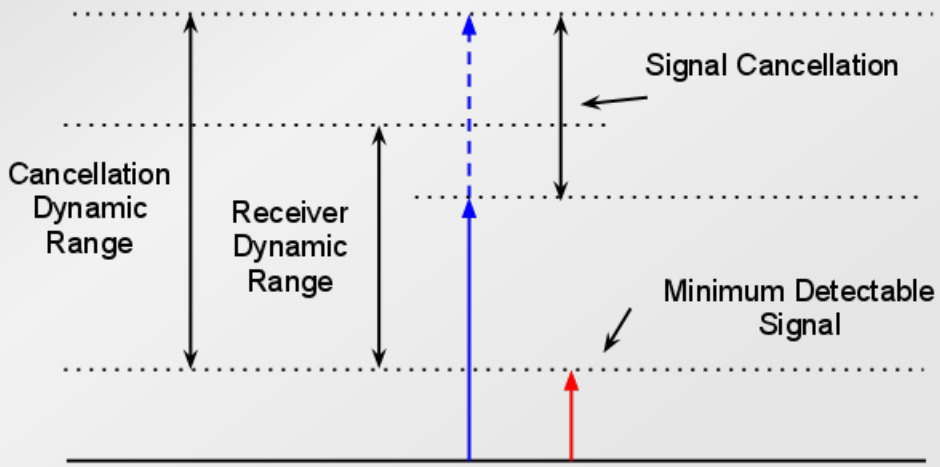

High Dynamic Range Measurement

- Limits on Dynamic Range:
  - RF signal source spurious leakage
    - Suppressed inherently through cancellation
  - Coupling of external RF emissions
    - Suppressed through RF shielding/isolation
  - AC power supply leakage
    - Eliminate by using DC power (i.e. batteries)
  - System thermal noise
- Ultimate limit on cancellation: quantization error
  - Quantization in DAC leads to finite resolution for VM output step
    - Can be improved with attenuation at a cost to dynamic range
  - Quantization in receiver leads to finite resolution for measurement
    - Calibration accuracy cannot exceed measurement accuracy

Two-Tone IMD Measurement

- Two-tone IMD measurement system built using separate cancellers for each channel
- Can be used for transmission or reflection

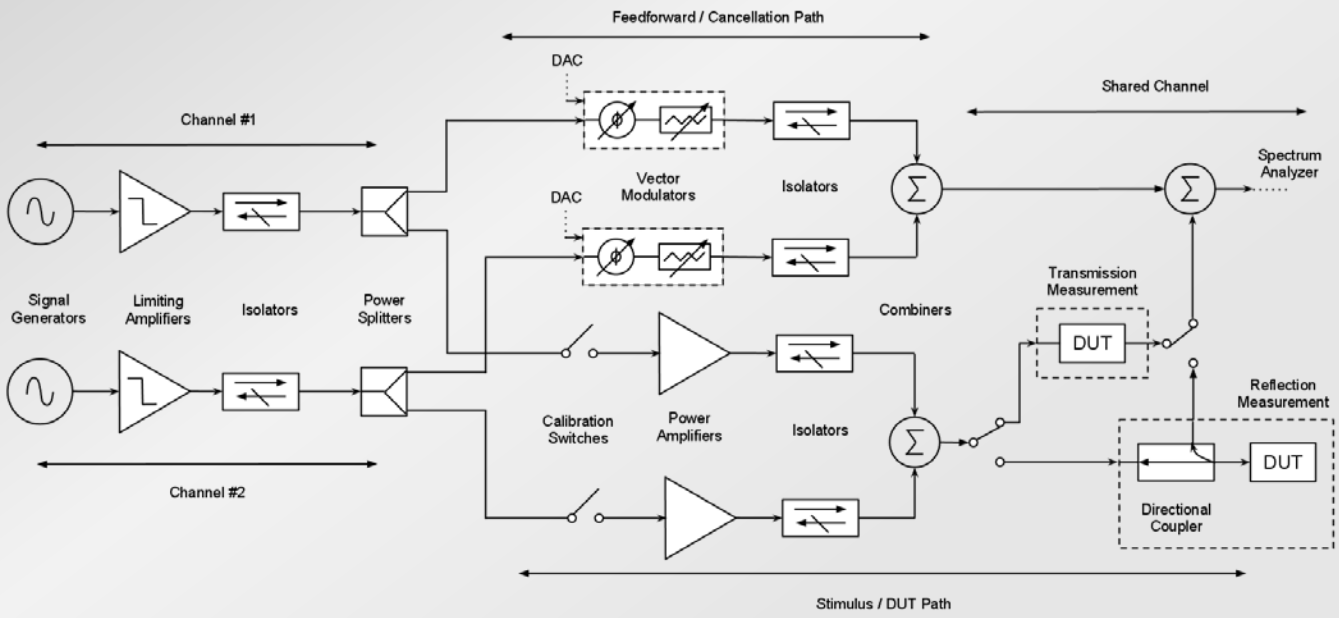

Intermodulation Dynamic Range, DR_{IM}

- The change in reference makes DR_{IM} theoretically independent of DUT characteristics and system configuration.

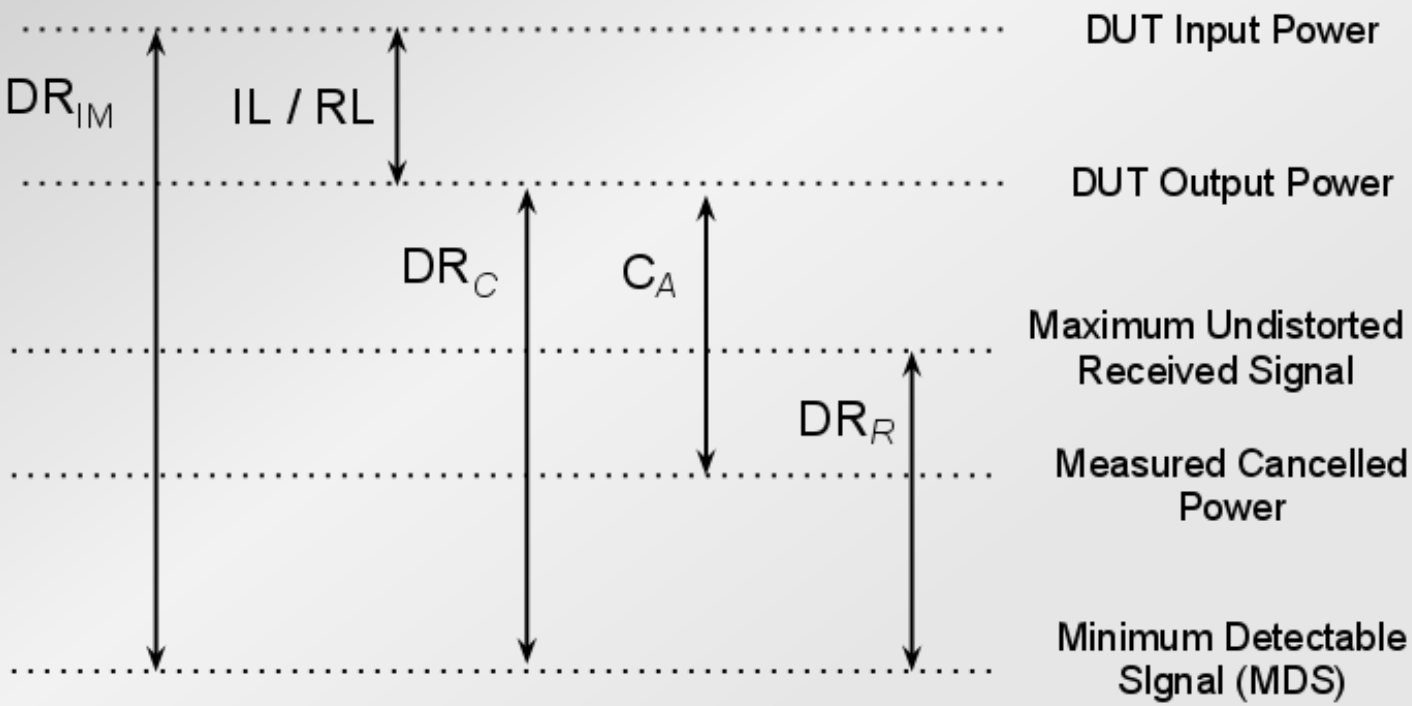

Two-Tone IMD Measurement

- Key to high dynamic range: linearity
  - Isolators reduce undesired mixing of channels through reverse path
  - Minimize external spurious content
    - External RF coupling, AC supply leakage
  - Low-PIM components:
    - Silver-plated
    - Physically large
    - Distributed implementations
- Bandwidth Limitations:
  - Isolators (typically half-octave):
    - Narrowest bandwidth in system, but only limits frequency range of a single channel
  - Shared channel components
    - Wider bandwidth than isolators but must include entire frequency range from lower IM product to upper IM product
  - Bandwidth limitations only affect maximum tone separation; system emphasis is on very small tone separation (to 1 Hz)

Measured Results (DR_{IM3})

- 460 MHz with an input power of 26 dBm.

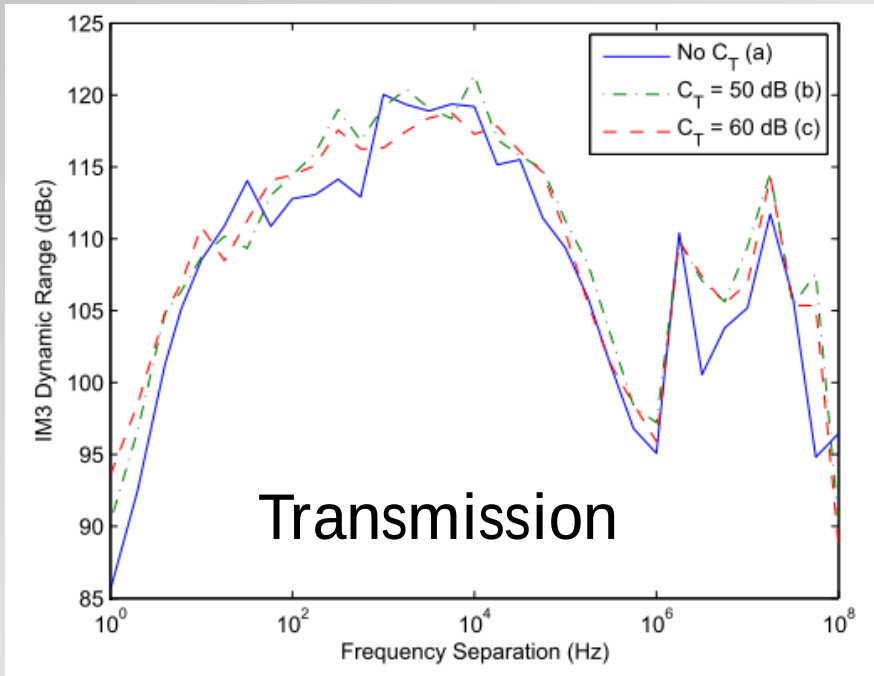

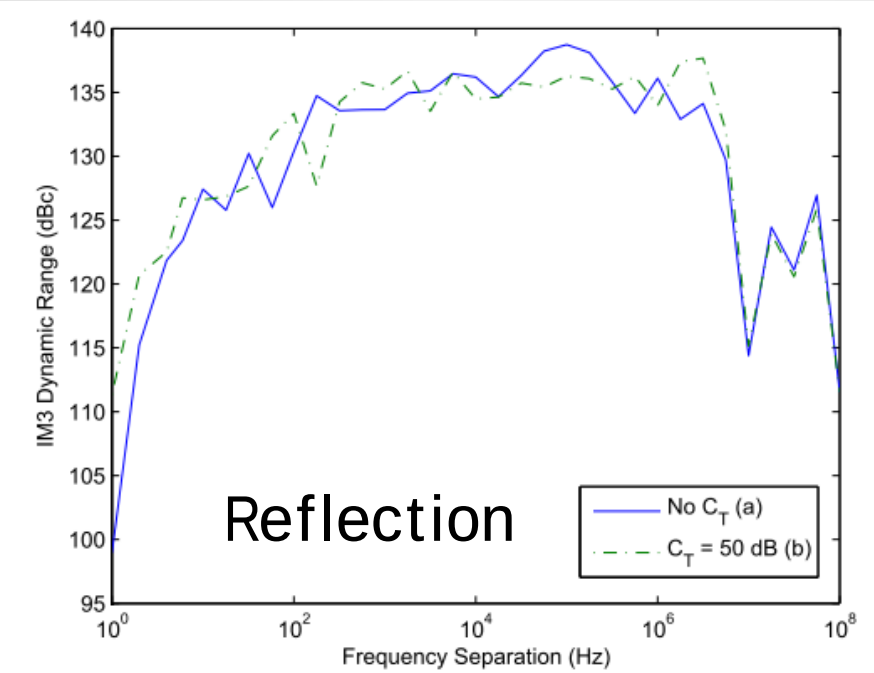

Measured Results (DR_{IM3})

- Spurious tone at 1 MHz only shows up in upper IM3 in transmission
  - Source currently unknown

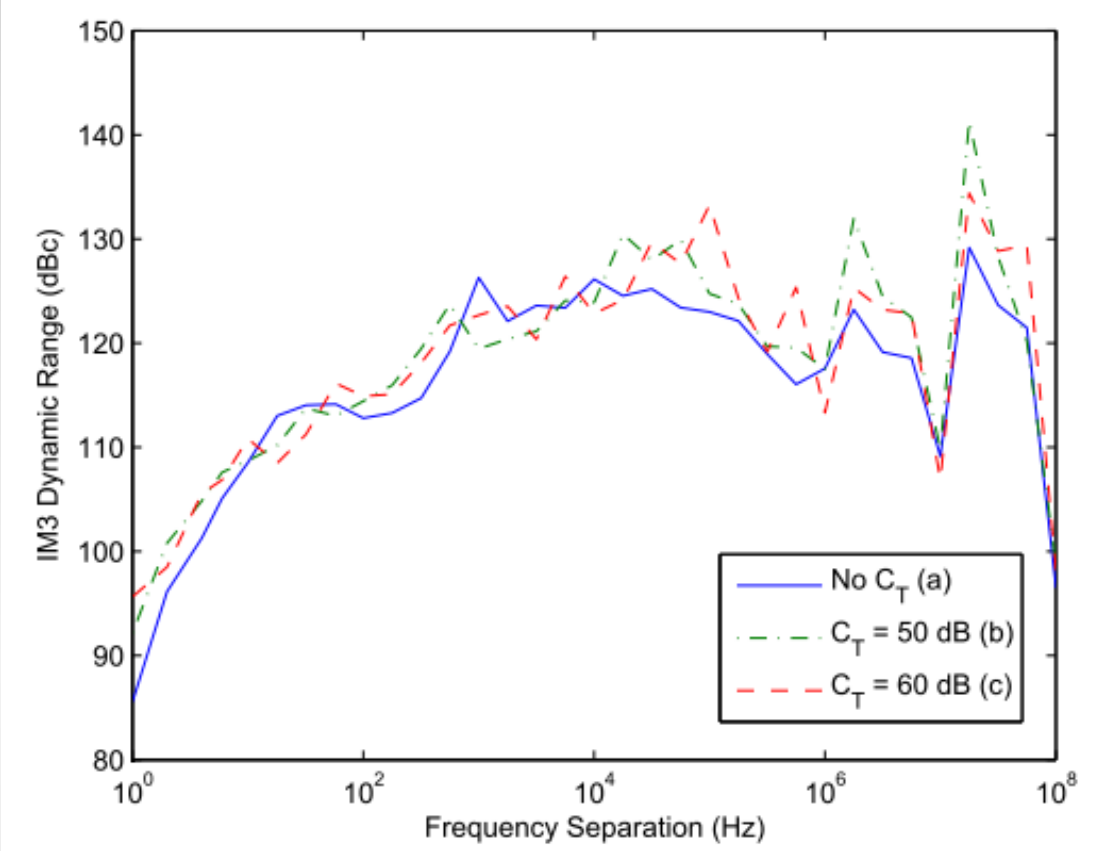

Measured Results (PIM)

- Pasternack PE6154, PE6152
  - Standard 2W terminations, similar form-factor

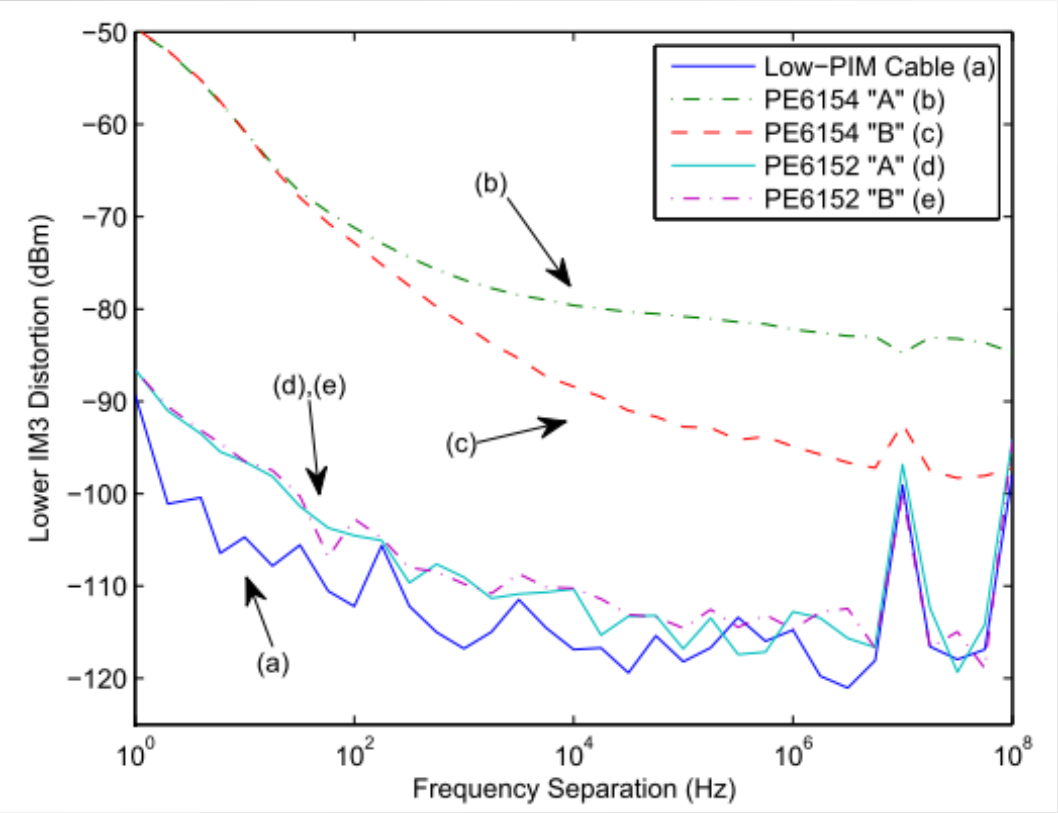

Lower IM3

Measured Results (PIM)

- Pasternack PE6097 (5W), PE6035 (10W)
  - High power, terminations with large “finned” aluminum heatsinks

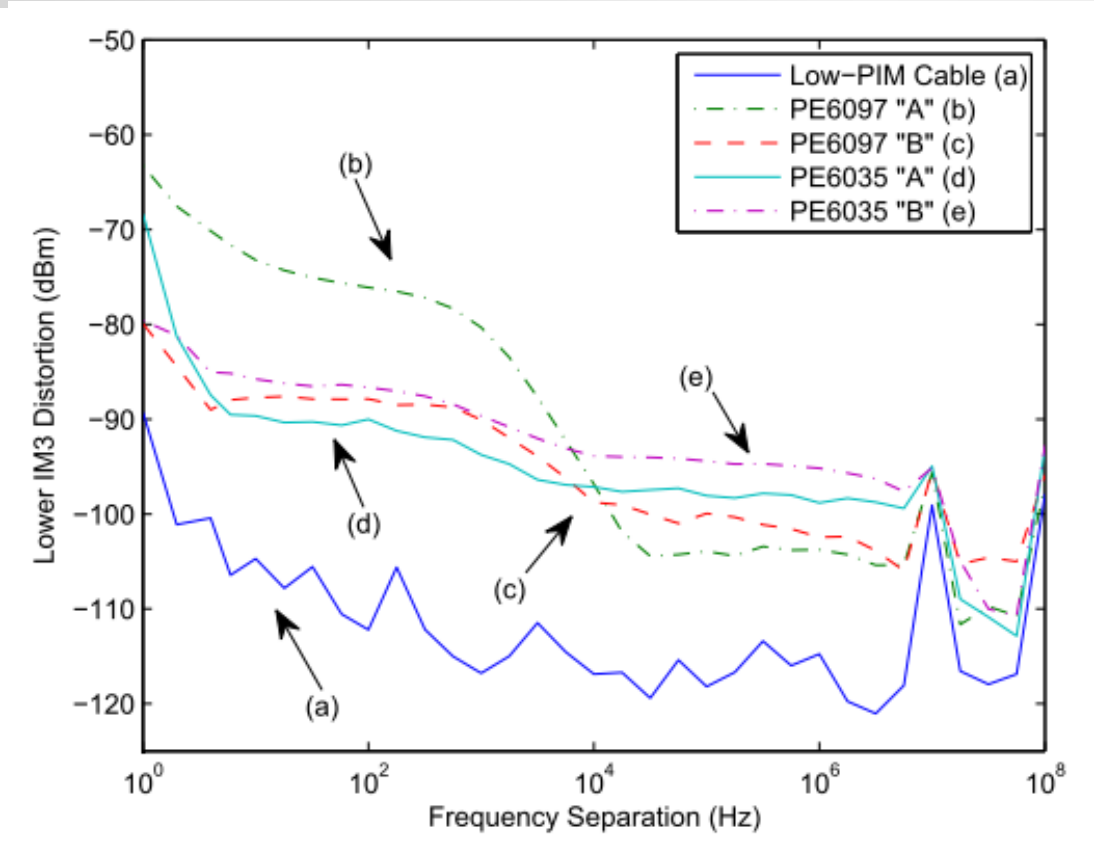

Lower IM3

Summary PIM Measurement

- Analog Canceller
  - Minimum DR_{IM3} :
    - Transmission: 94 dBc at 1 Hz (C_T = 60 dB)
    - Reflection: 111 dBc at 1 Hz (C_T = 50 dB)
  - Minimum DR_{IM3} between 100 Hz – 30 kHz:
    - Transmission: 113 dBc (C_T = 60 dB)
    - Reflection: 130 dBc (C_T = 50 dB)
  - Limited improvement with additional cancellation except at $\Delta f < 10$ Hz
    - At these tone separations, the MDS is the phase noise off the carrier signals: extra cancellation directly reduces the MDS, improving DR_{IM3}
  - Spurious tones reduce performance at 10 MHz, and 100 MHz
    - Sources currently unknown

References

- R. Hartman, “SI Series PIM Analyzers - D Model Revision,” Available: http://www.summitekinstruments.com/passive/docs/Technical Data D.pdf.
- A. Christianson and W. Chappell, “Measurement of ultra low passive intermodulation with ability to separate current/voltage induced nonlinearities,” *2009 IEEE MTT-S Int Microwave Symp Digest*, 7-12 June 2009, pp. 1301-1304.
- J. R. Wilkerson, K. G. Gard, and M. B. Steer, “Automated broadband high-dynamic-range nonlinear distortion measurement system,” *IEEE Trans. Microwave Theory and Techniques*, vol. 58, no. 5, pp. 1273-1282, May 2010.
- J. Henrie, A. Christianson, W. J. Chappell, “Prediction of passive intermodulation from coaxial connectors in microwave networks," *IEEE Trans. Microwave Theory and Techniques*, vol. 56, no. 1, pp. 209-216, Jan. 2008.
- J. R. Wilkerson, K. G. Gard, A. G. Schuchinsky, and M.B. Steer, “Electro-thermal theory of intermodulation distortion in lossy microwave components,” *IEEE Trans. Microwave Theory and Techniques*, vol. 56, no. 12, pp. 2717-2725, Dec. 2008.
- J. R. Wilkerson, P. G. Lam, K. G. Gard, and M.B. Steer, “Distributed passive intermodulation distortion on transmission lines,” *IEEE Trans. Microwave Theory and Techniques*, vol. 59, no. 5, pp. 1190-1205, May. 2011.
- J. R. Wilkerson, K. G. Gard, and M.B. Steer, “Electro-thermal passive intermodulation distortion in microwave attenuators," *Proc. 36th Eur. Microwave Conf.*, 10-15 Sept. 2006, pp. 157-160

Time-Frequency Effect Filter PIM

Delay Effects in Filters

BANDPASS FILTER

SOURCE LOAD

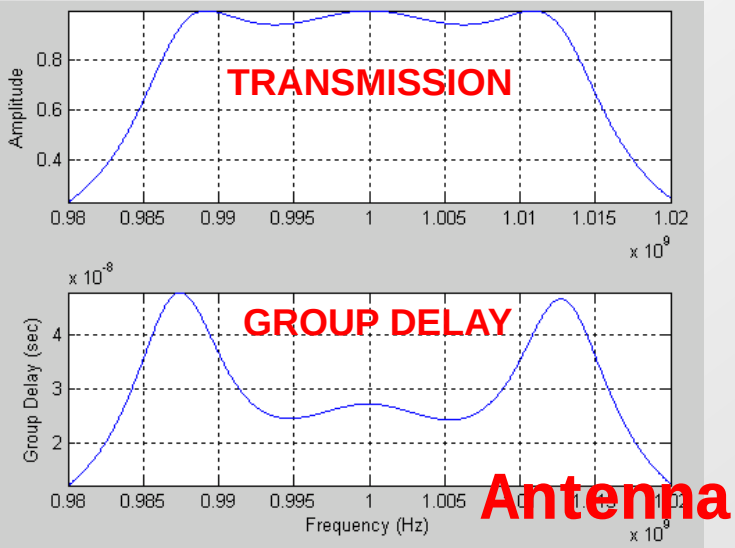

Thesis:
Can we use variation in group delay to develop an optimum waveform to create large nonlinear effects.

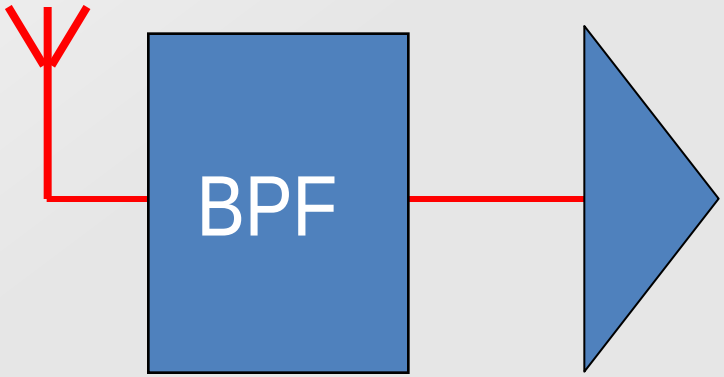

Switched Tone Response of a Filter

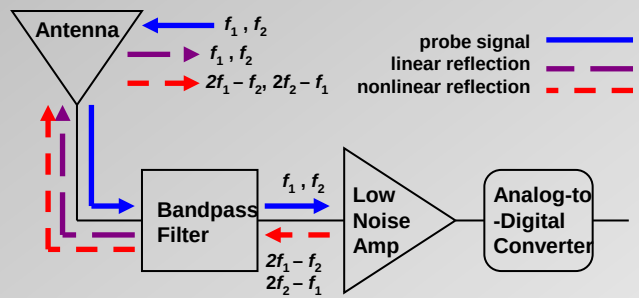

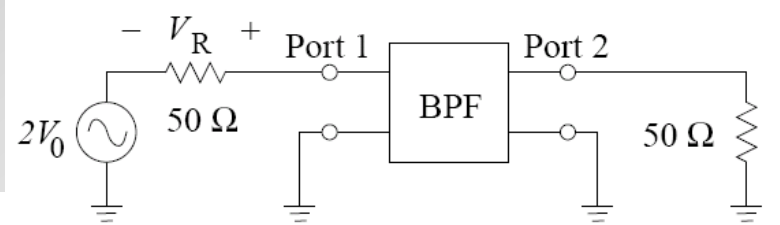

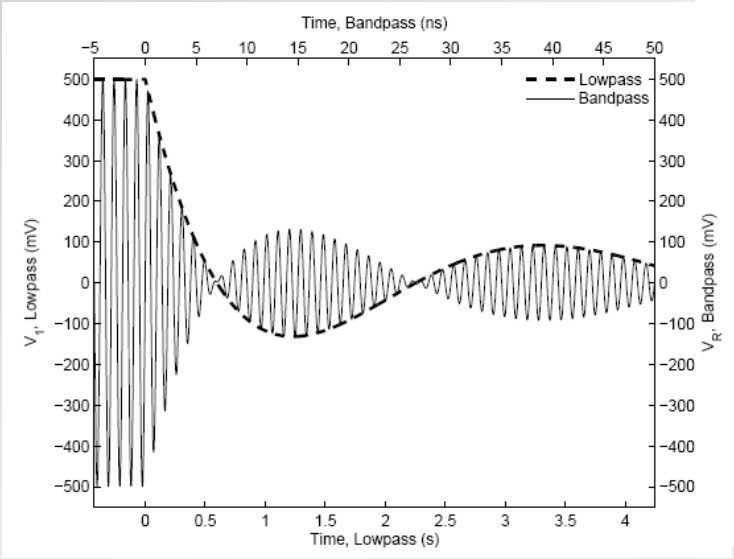

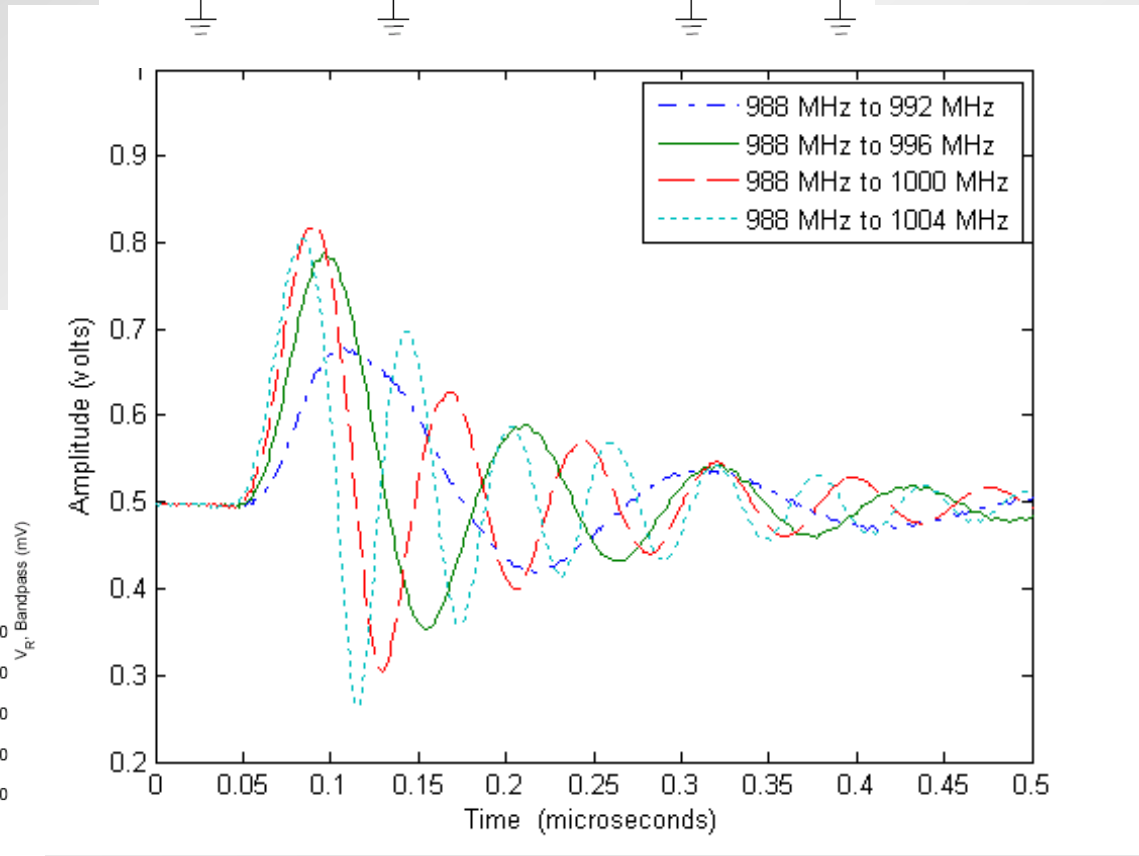

Time-Frequency Response of a Filter

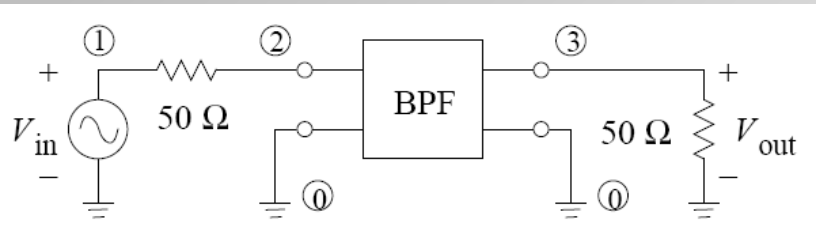

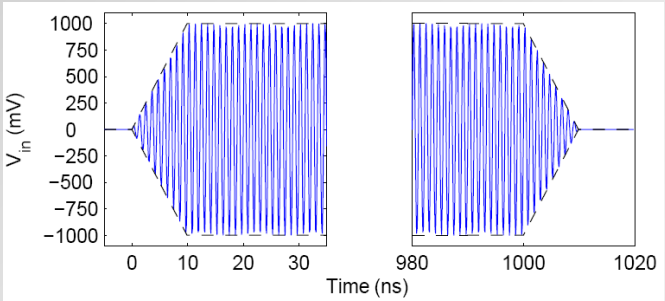

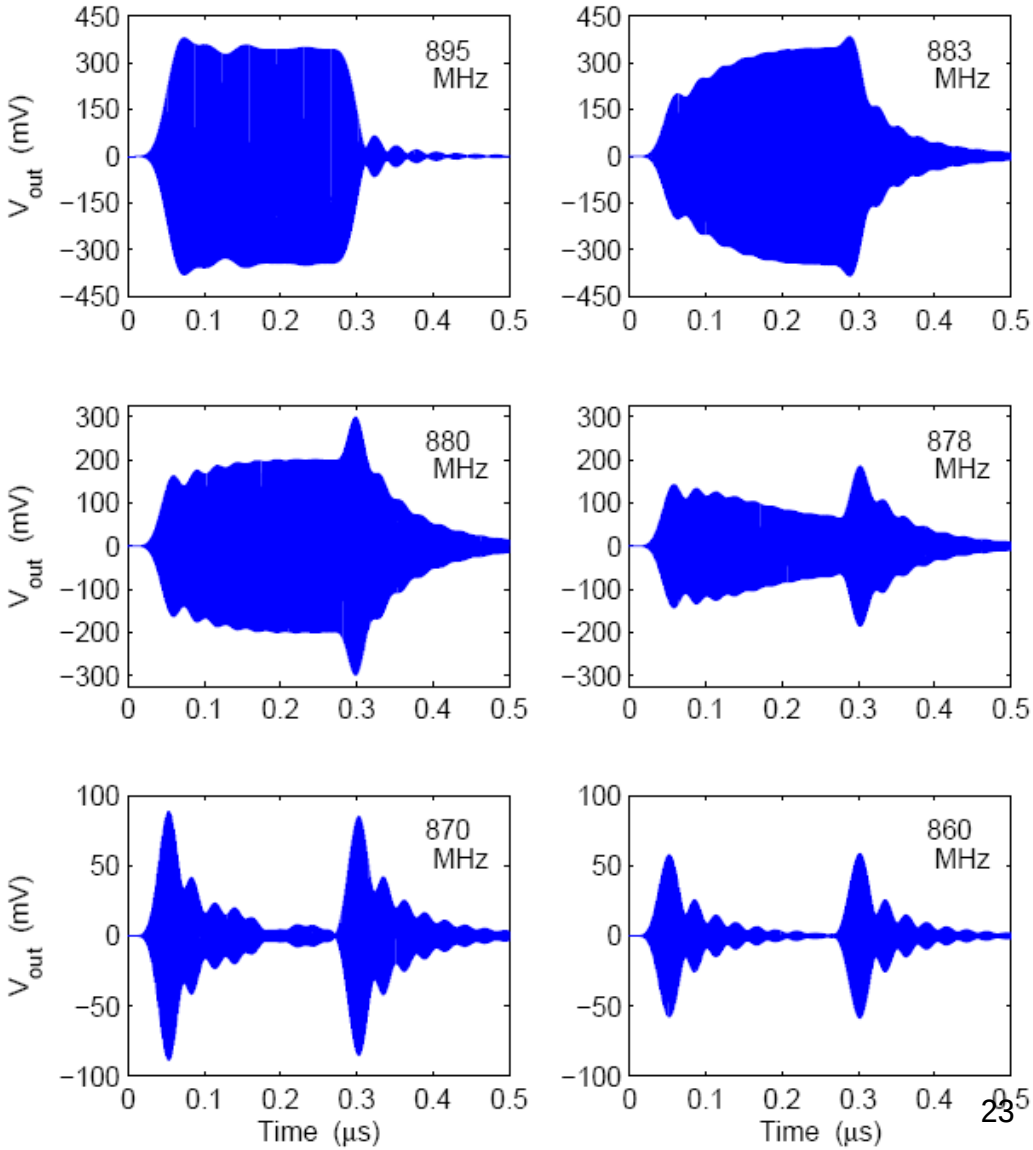

Modeling

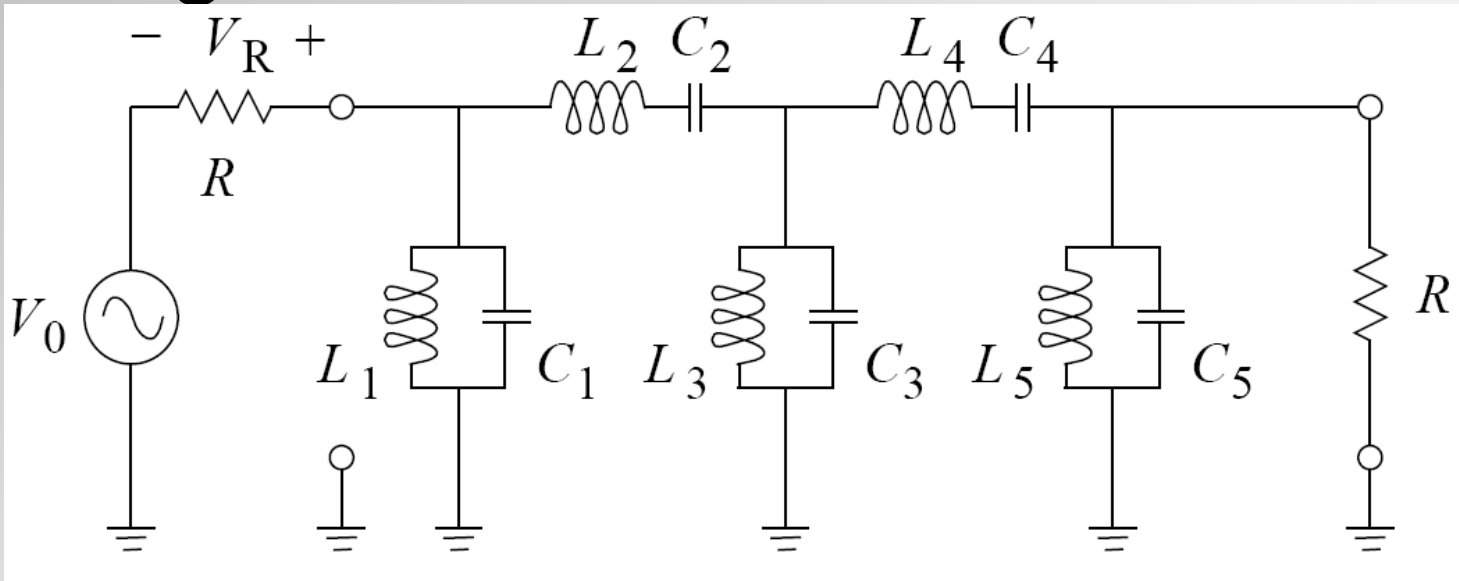

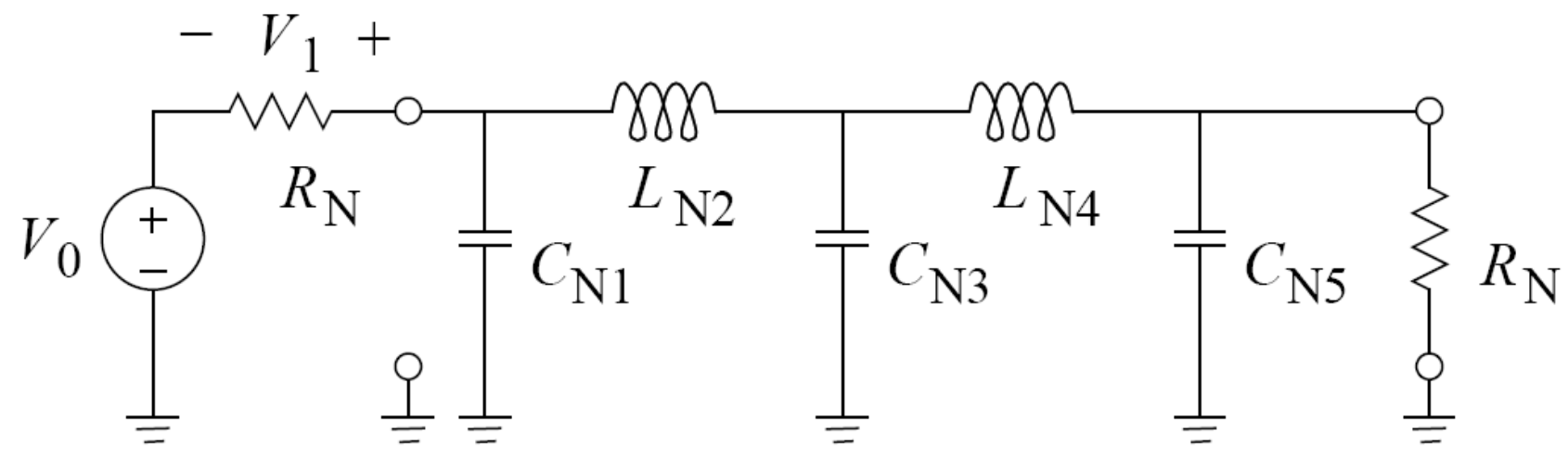

Memory Effect

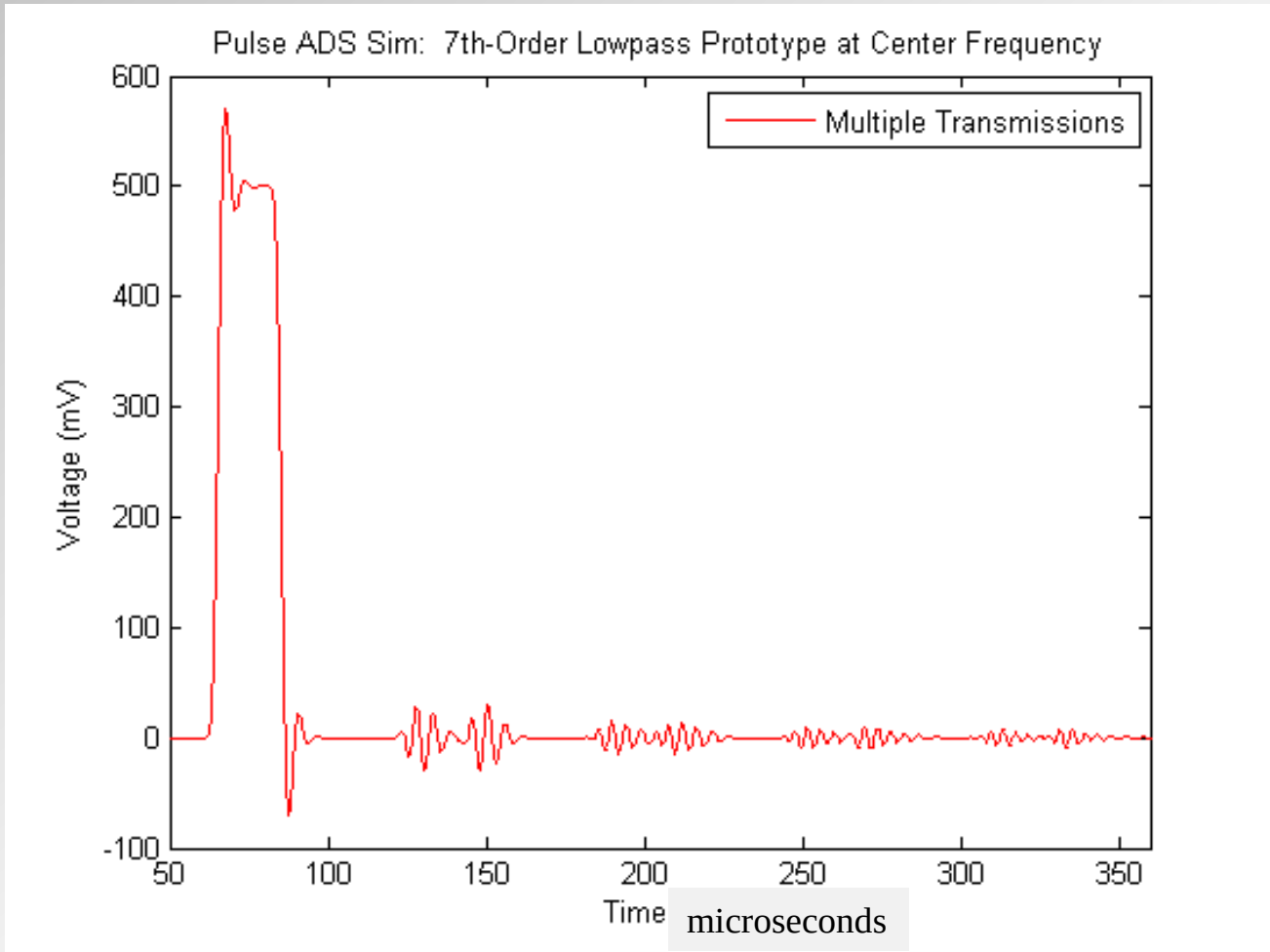

Linear PIM

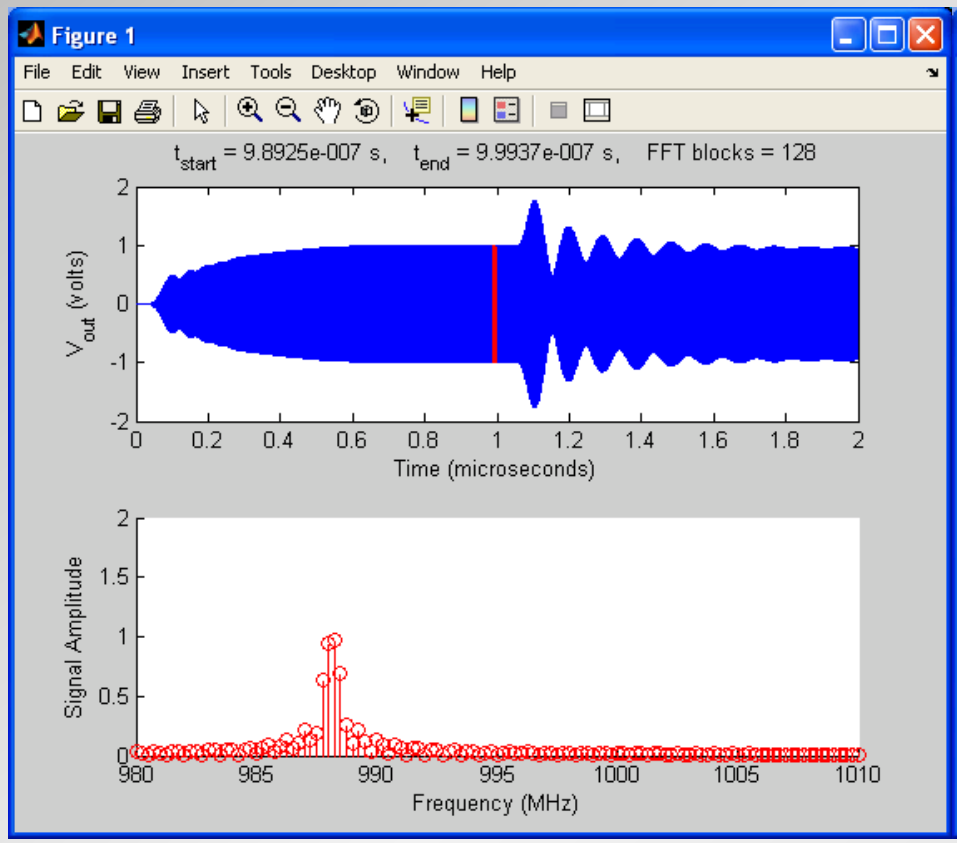
Figure 1
File Edit View Insert Tools Desktop Window Help
t_start = 9.8925e-007 s, t_end = 9.9937e-007 s, FFT blocks = 128
V_out (volts)
Time (microseconds)
Signal Amplitude
Frequency (MHz)

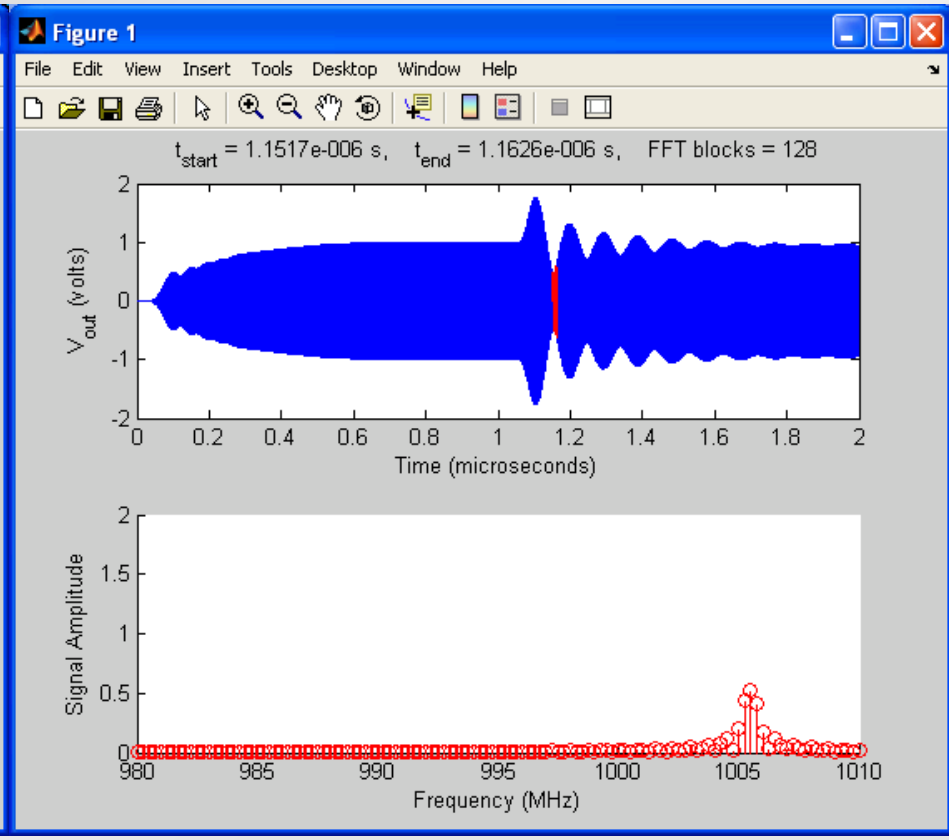
Figure 1
File Edit View Insert Tools Desktop Window Help
t_start = 1.1517e-006 s, t_end = 1.1626e-006 s, FFT blocks = 128
V_out (volts)
Time (microseconds)
Signal Amplitude
Frequency (MHz)

Stepped Two-tone Signals

Frequency separation stepped logarithmically from 1 kHz to 1 MHz

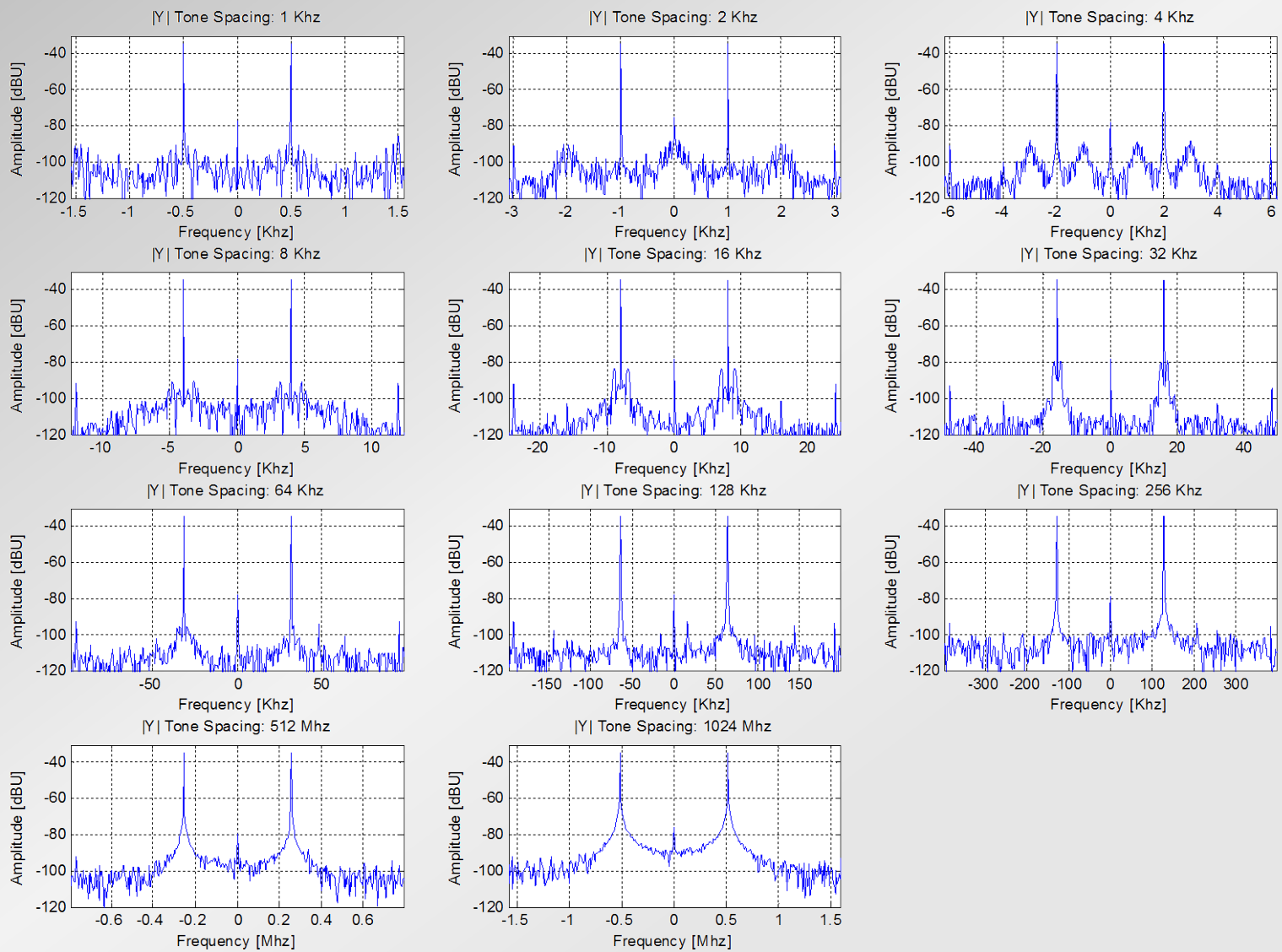

Time-Frequency Effects: Linear Transient Distortion

- What are the effects of these transients on wireless communications?

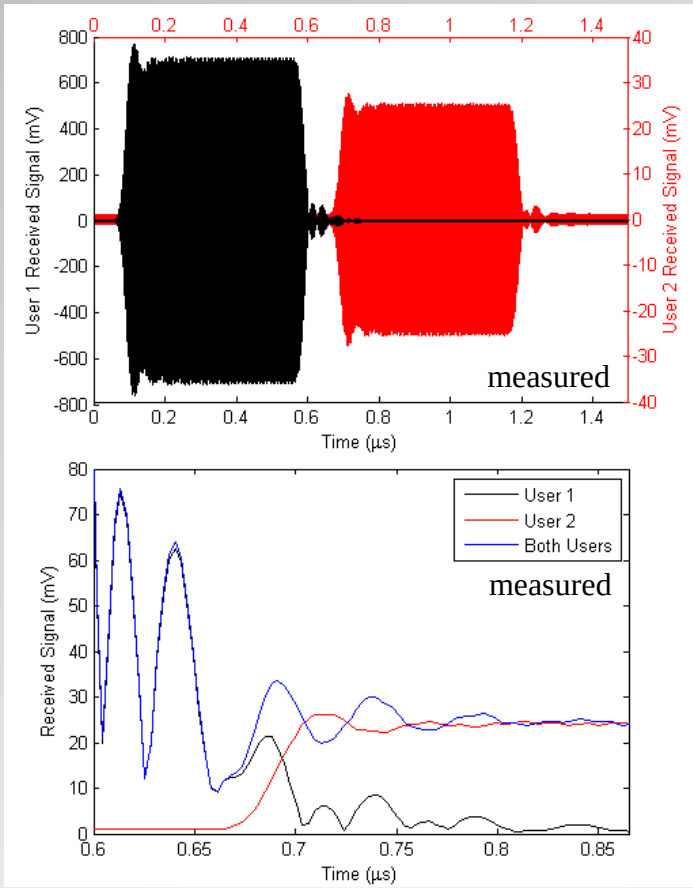

Filtered <u>frequency-hopping</u> pulses, 900-MHz 4% filter
User 1 at 10 dBm, User 2 at -20 dBm
900 MHz, 100 ns guard interval

- sharp filtering can degrade received signal-to-noise ratio

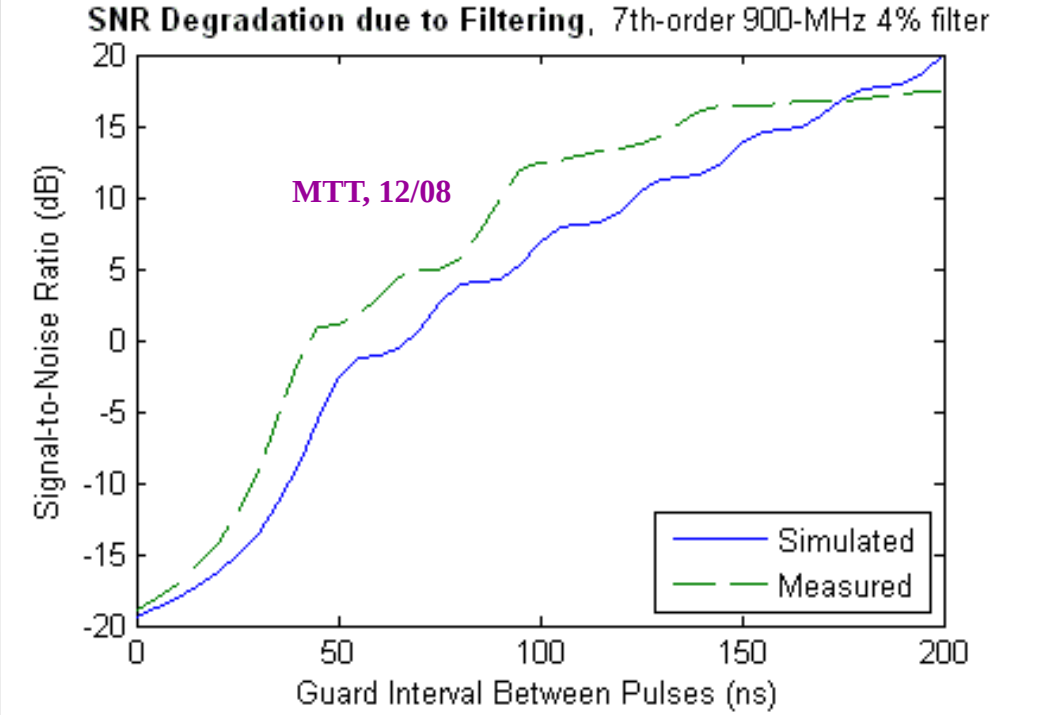

Nearest work:
Chohan/Fidler (1973) -- impact on FSK & PSK, no metric

Time-Frequency Effects: Linear Metrology

- How do we measure parameters of coupled resonator circuits?
  - the Q factor of the outer resonators in a chain may be determined with time-domain analysis

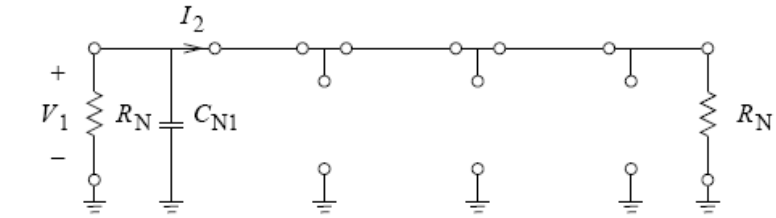

Figure 5: Equivalent lowpass circuit after source is zeroed

$$\frac{dV_1(0)}{dt_N} = -\frac{V_1(0)}{R_N C_{N1}} - \frac{I_2(0)}{C_{N1}} = -\frac{2}{R_N C_{N1}} V_1(0)$$

$$\tau = \frac{t}{\ln\left(V_0^2\right) - \ln\left(V_R^2(t)\right)}$$

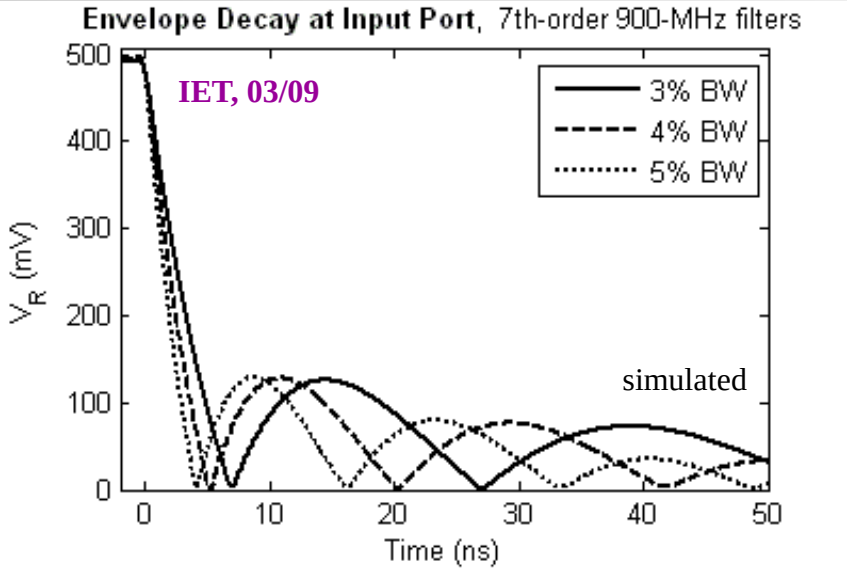

900-MHz stimulus tone turned off at t = 0 ns

Table 2: Measured Q-Value Estimation, 900 MHz Chebyshev Design

Filter Order	BW	Passband Ripple (dB)	2-Port Q Value	1-Port Q Value
7	4%	0.01	23.3	24.6
	5%	0.01	18.4	20.1

Nearest prior work:

Pereda (1992) -- Prony analysis, dielectric resonators, not a 'coupled' structure

Time-Frequency Effects: Linear Metrology

- How else can we exploit transients for metrology?

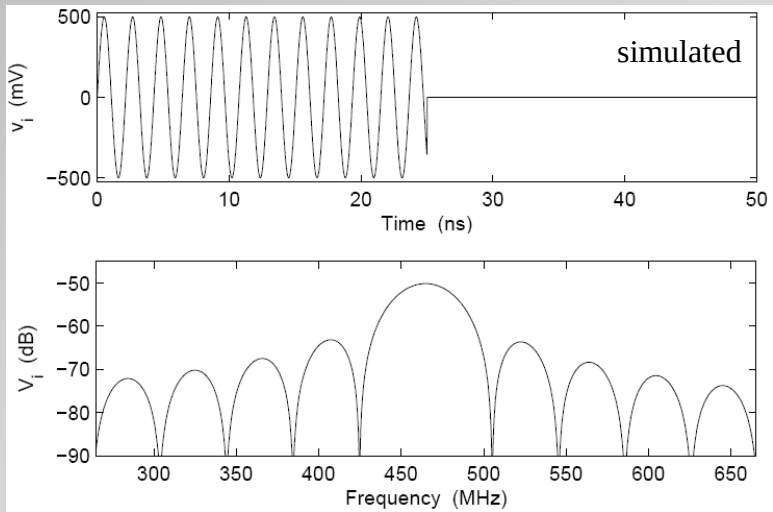

➢ 2-port *S*-parameters can be extracted from short-pulse time-domain responses

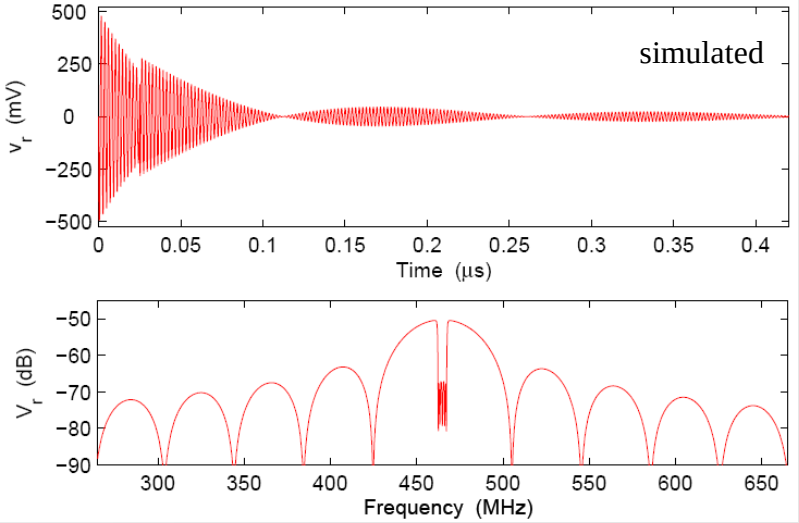

Time- & frequency-domain views, short pulses
465-MHz 1% Chebyshev filters

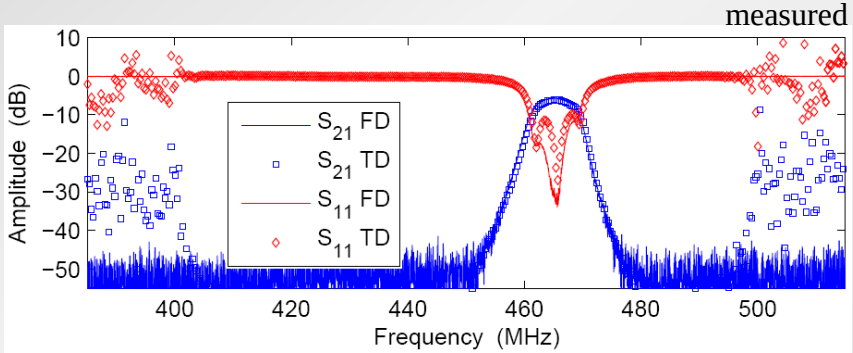

Nearest prior work:
Courtney (1999) –
permittivity measurements,
nanosecond impulses

Time-Frequency Effects: Nonlinear Metrology

- **Can we exploit filter properties for <u>nonlinear</u> measurements?**

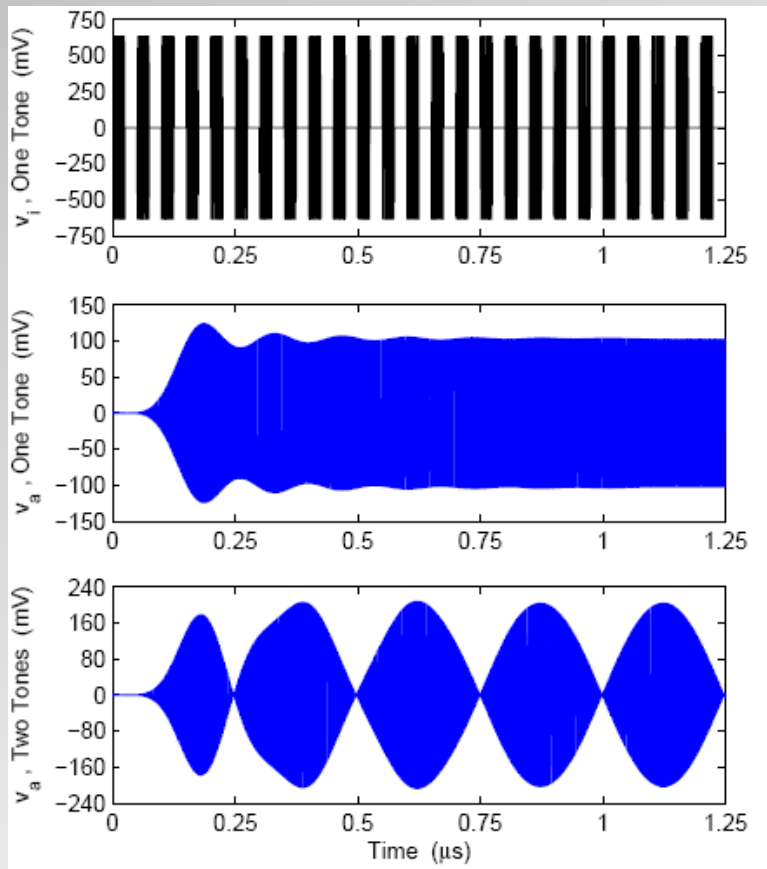

Simulated fast-switching filter response
7th-order 465-MHz Chebyshev design
(a) input, 1 tone, (b) output, 1 tone, (c) output, 2 tones

- IP3 of an amplifier can be measured using a filter & switched-tone source
- a device's passband can be extracted from 1 port

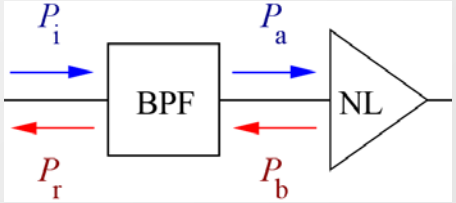

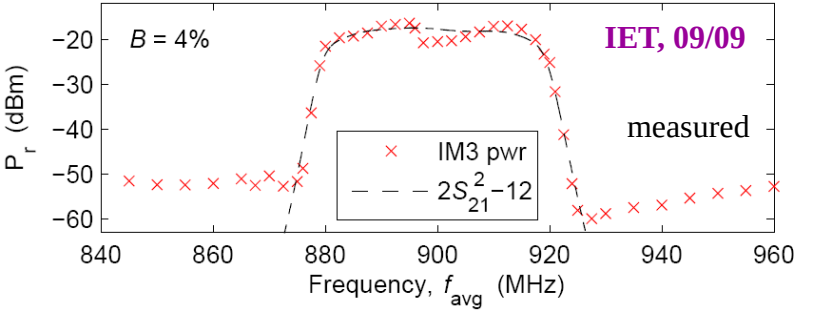

Passband extraction for bandpass filter
7th-order 900-MHz Chebyshev design

Nearest prior work: **Walker** (2005) – steady-state two-tone testing

Linear Amplification by Time-Multiplexed Spectrum

- **How can we improve linearity by applying time-frequency techniques?**

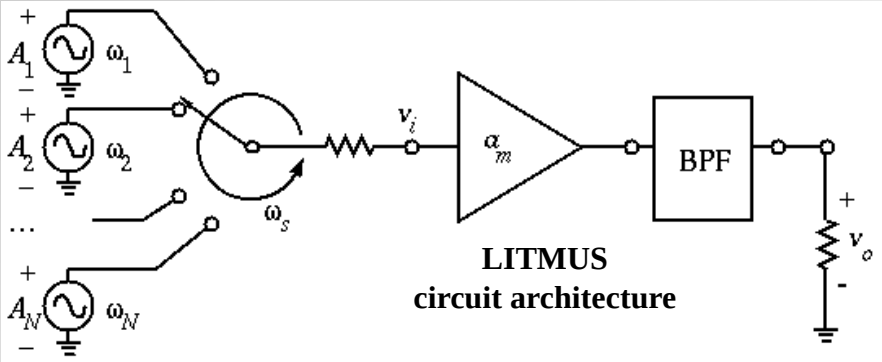

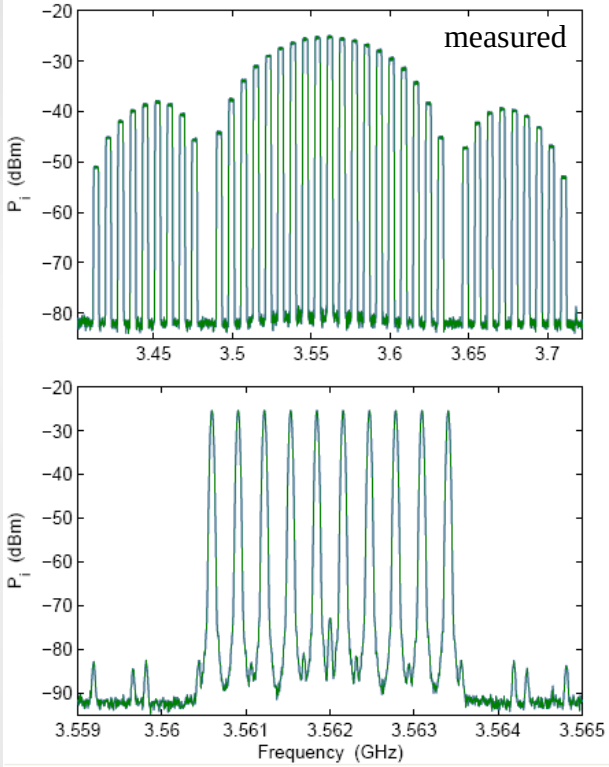

Wideband & narrowband spectra for *N* = 10
generated by Agilent N6030A + QM3337A modulator

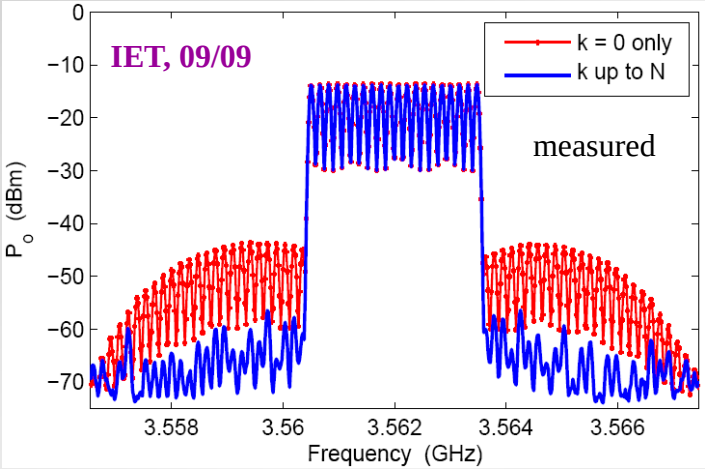

Distortion reduction for *N* = 20
non-multiplexed (red) vs. multiplexed (blue)
Ophir 5162 amplifier

- the IMD associated with amplitude modulation can be reduced by trading signal bandwidth for smaller Peak-to-Amplitude Ratio

Summary: Time-Frequency Effects

Narrowband transients last longer than expected.

co-site interference

(a) identified resonant cascade as a source of long tails
(b) developed a differential-equation simplification
(c) showed frequency-dependence of the tails causes pulse overlap
(d) evaluated ISI and IMD for frequency-hopping scenarios

Used filter transients to develop new measurement techniques:

non-destructive testing

(a) *Q*-factor of a single resonator
(b) bandwidth, without *S*-parameters
(c) broadband *S*-parameters from a single time-domain trace
(d) device passband from a single input port

Time-multiplexing & filtering — LITMUS:

reduces IMD associated with amplitude modulation

transmitter linearity

Summary

- High dynamic range measurement system
- Time-Frequency effects produce apparent PIM

Review of Time-Frequency Effects

Time-Frequency Effects: Tucker/Eaglesfield (1946)

- **commonly-used 6-element bandpass filter**

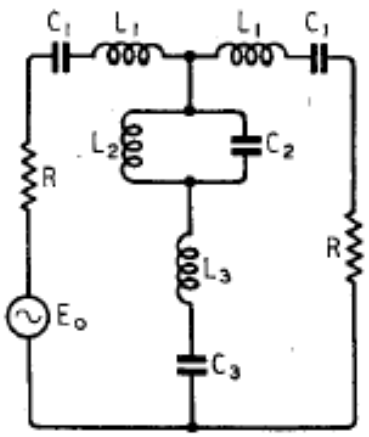

Fig. 3. *6-element symmetrical filter.*

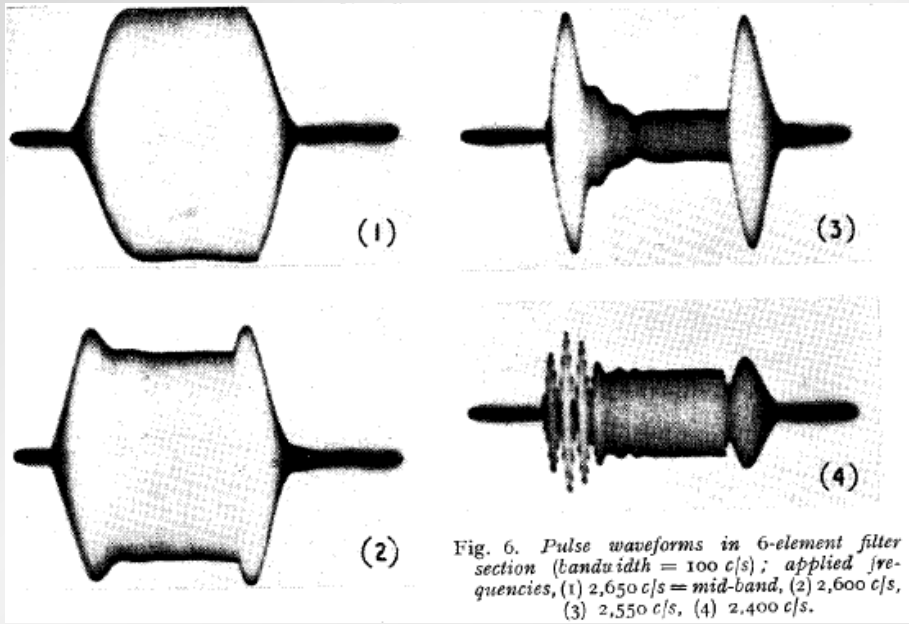

Fig. 6. *Pulse waveforms in 6-element filter section (bandwidth = 100 c/s); applied frequencies,* (1) 2,650 *c/s = mid-band,* (2) 2,600 *c/s,* (3) 2,550 *c/s,* (4) 2,400 *c/s.*

Filtered Pulse Responses

- while analyzing *non-ideal* (transmission-characteristic) filters…
- oscilloscopes can capture filtered pulse envelopes
- differential operators (precursor to Laplace Transforms) can be used to solve for analytical forms for pulse responses

"Transient response of filters," *Wireless Engineer*, Vol. 23, pp. 36-42 & 84-90, Feb-Mar. 1946

Time-Frequency Effects: Hatton (1951) & McCoy (1954)

- amplitude transients & frequency transients for a single resonator

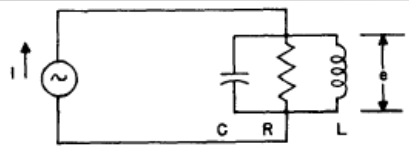

Fig. 1

Circuit used in calculations. $i(t) = \cos \omega_1 t$, $t < 0$; $i(t) = \cos \omega_2 t$, $t > 0$; center frequency of tuned circuit $= \omega_3$; bandwidth of tuned circuit $= 2/T$; $\omega_1 = \omega_3 - k_1/T$; $\omega_2 = \omega_3 + k_2/T$.

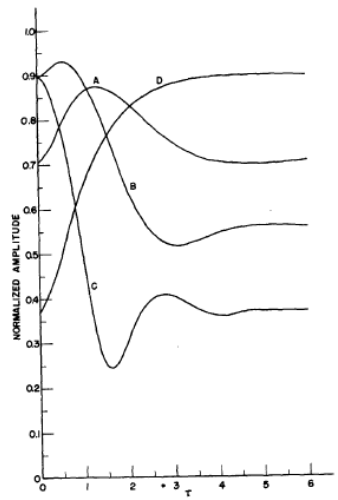

Fig. 6

Typical amplitude transient accompanying the frequency transients for various amounts of decentering. All jumps have size 2/T. Curve A: decentering = 0. Curve B: decentering = + 1/2. Curve C: decentering = + 1 1/2. Curve D: decentering = - 1 1/2.

Normalized Amplitude Transients

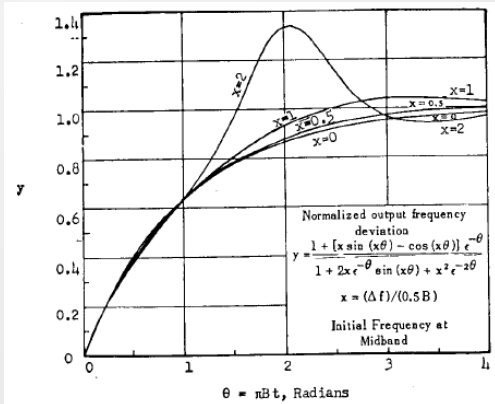

Fig. 2—Response of a single tuned circuit to a rectangular-step frequency shift, starting at midband frequency.

Normalized Frequency Transients

- while comparing frequency-modulation to amplitude-modulation…
- overshoots in amplitude & frequency are possible for input frequency transitions within a filter's passband

"Simplified FM transient response," MIT, Cambridge, MA, Tech. Rep. 196, Apr. 1951
"FM transient response of band-pass circuits," *Proc. IRE*, vol. 42, no. 3, pp. 574-579, Mar. 1954

Time-Frequency Effects: Blinchikoff (2001)

- Lowpass vs. bandpass transient responses

$$u_b(t) \approx u_l(t_N)\cos(\omega_0 t + \theta)$$

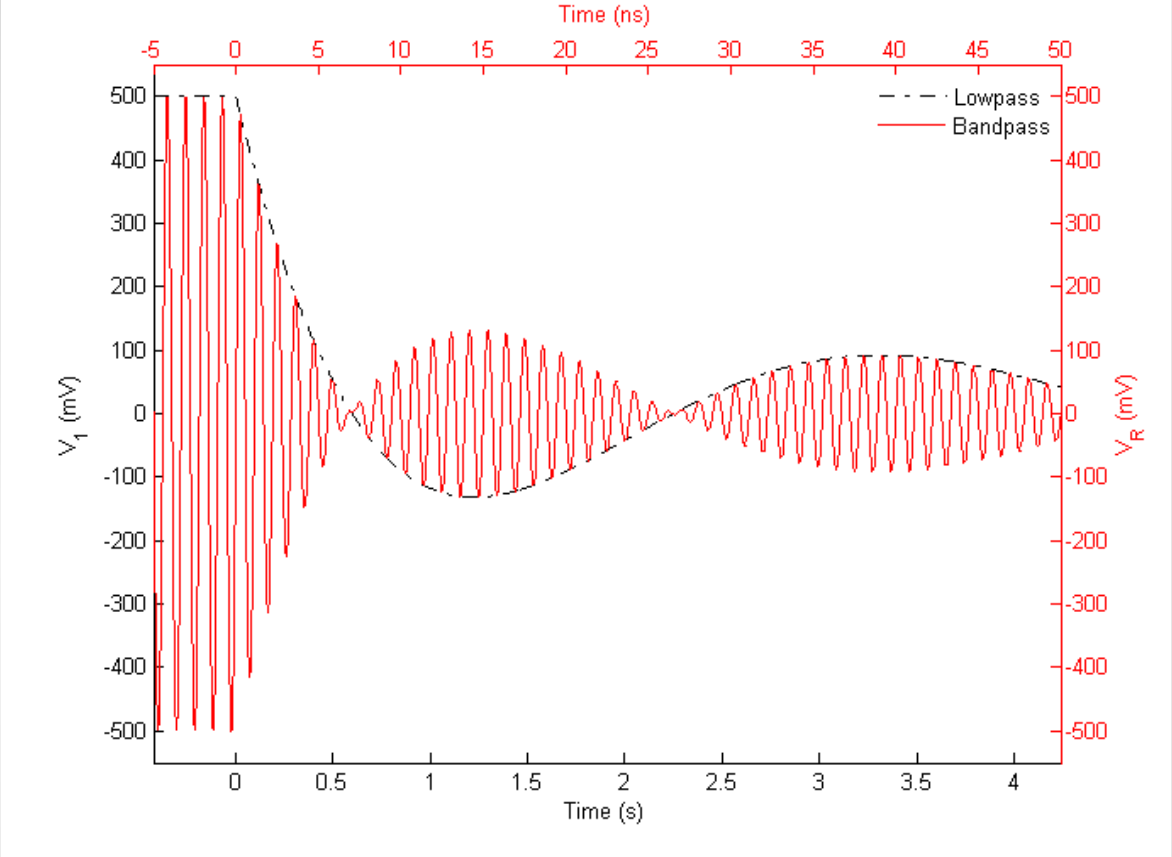

- transient response at midband is a time-scaled version of the lowpass turn-on response

Filtering in the Time and Frequency Domains, Raleigh, NC: SciTech Publishing, Inc., 2001.

Time-Frequency Effects: Chohan/Fidler (1973)

- **frequency transients, steps of phase/frequency at filter input**

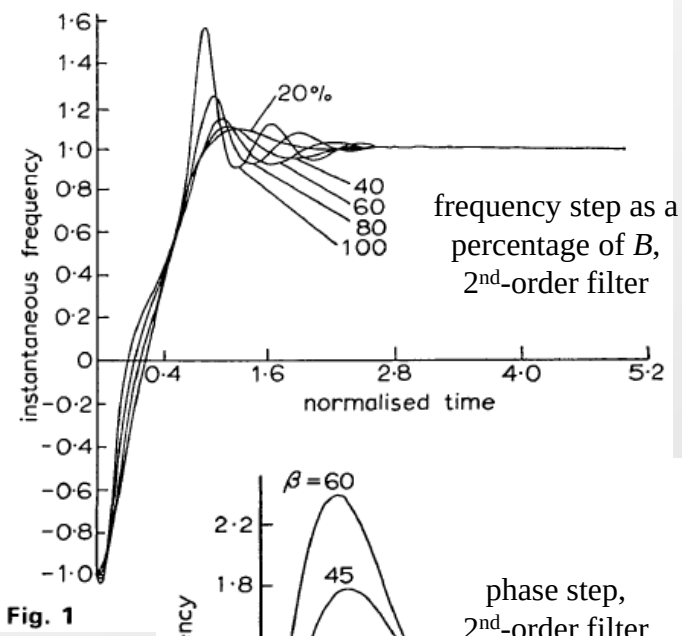

Fig. 1

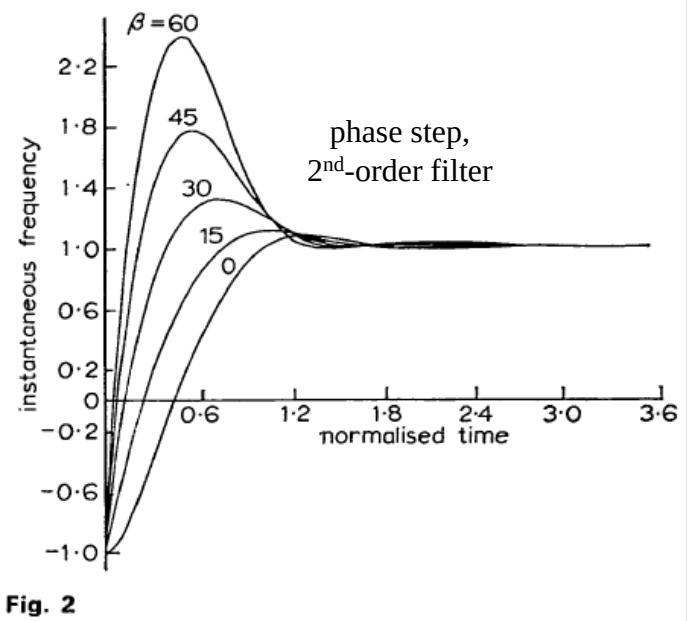

Fig. 2

- while investigating filtering effects on FSK- and PSK-type signals…
- generalized earlier narrowband Laplace methods for any order & any Q value

"Generalised transient response of bandpass transfer functions to FSK and PSK-type signals," *Electronics Letters*, vol. 9, no. 14, pp. 320-321, July 1973.

Time-Frequency Effects: Vendik/Samoilova (1997)

- resonators: transmission line & microstrip

  - attributed nonlinearities to
    - (a) crystalline structure
    - (b) charge carrier density
    - (c) Abrikosov vortices

  - resistance is a function of current

$$R_1(x,t) = R_1\left[1 + \frac{I^2(x,t)}{I_0^2}\right]$$

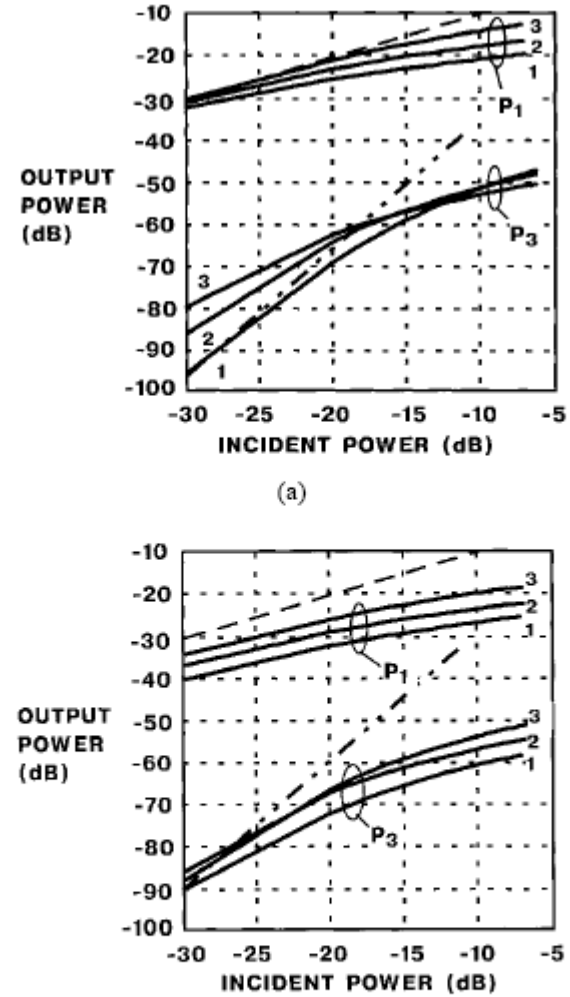

Fig. 7. Output power of first (P_1) and third (P_3) harmonics as functions of incident power P_{incid}. The power is normalized to the characteristic power P_0. (a) Q_u=10 000; Q_e: 1: 500, 2: 1000, 3: 2000; (b) Q_u=1000; Q_e: 1: 500, 2: 1000, 3: 2000. In the figure, dashed line corresponds to the slope of power 1; dashed-dotted line corresponds to the slope of power 3.

"Nonlinearity of superconducting transmission line and microstrip resonator"
IEEE Trans. Microw. Theory Tech., vol. 45, no. 2, pp. 173-178, Feb. 1997.

Time-Frequency Effects: Pereda (1992)

- estimation of quality factor from resonant decay

$$S(n\Delta t) = \sum_{i=1}^{p} A_i \exp\left((\alpha_i + j2\pi f_i)n\Delta t\right) \quad \text{for } n = 0, \cdots, N-1, \qquad (1)$$

Prony analysis

- while investigating resonance in dielectric resonators…
- reduced time to compute resonant frequencies and quality factor using FDTD and Prony analysis

TABLE I-A
COMPARISON OF THE RESONANT FREQUENCIES AND Q-FACTORS OF THE SIX LOWEST MODES OF AN ISOLATED DR OBTAINED BY VARIOUS METHODS. AXISYMMETRIC MODES

	TE_{01}		TM_{01}		TE_{02}	
	F(GHz)	Q	F(GHz)	Q	F(GHz)	Q
Moment Method [9]	4.829	45.8	7.524	76.8		
Null-Field Method [8]	4.8604	40.819	7.5384	76.921	8.3311	301.02
Measured [10]	4.85	51	7.60	86		
Present Method	4.862	47	7.524	71	8.320	302

"Computation of resonant frequencies and quality factors of open dielectric resonators by a combination of finite-difference time-domain and prony's methods,"
IEEE Microwave and Guided Wave Letters, vol. 11, no. 2, pp. 431-433, Nov. 1992.

Time-Frequency Effects: Dunsmore (1999)

- Time-domain coupled-resonator filter tuning
  - while working at Hewlett-Packard Microwave Instruments Division…
  - showed how to tune individual resonators using time-domain return loss

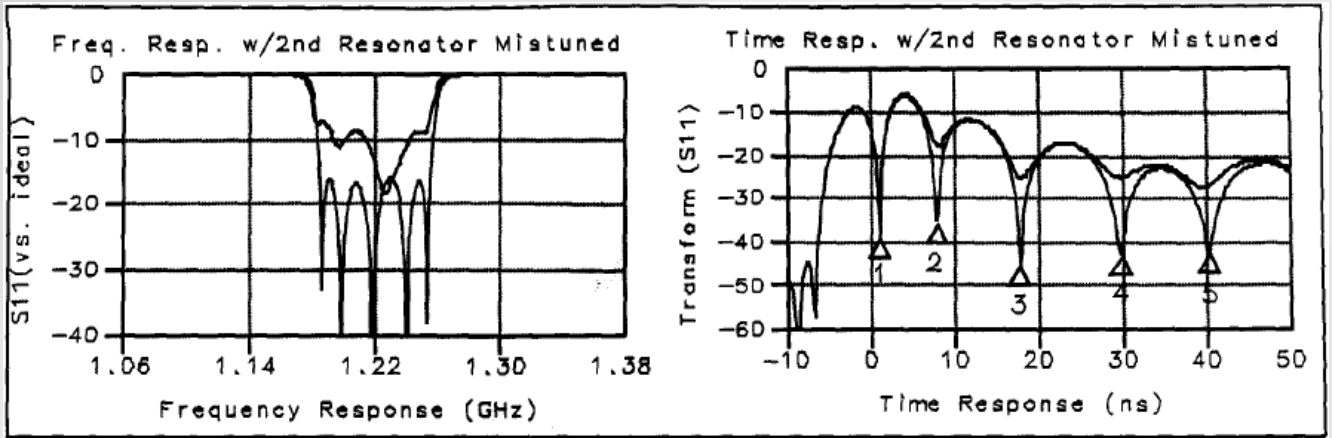

Figure 2: Frequency response (left) and time domain response (right) of the return loss (S11) of a perfectly tuned filter (lighter trace) and a filter with the second resonator mis-tuned (darker trace).

"Tuning band pass filters in the time domain,"
IEEE MTT-S Int. Microw. Symp., Anaheim, CA, June 1999, pp. 1351-1354.

Time-Frequency Effects: Courtney (1999)

- Frequency measurements from time-domain traces

➢ while trying to determine broadband permittivity and permeability of a sample material…

➢ found a way to measure T and Γ by time-domain-reflectometry with nanosecond impulses

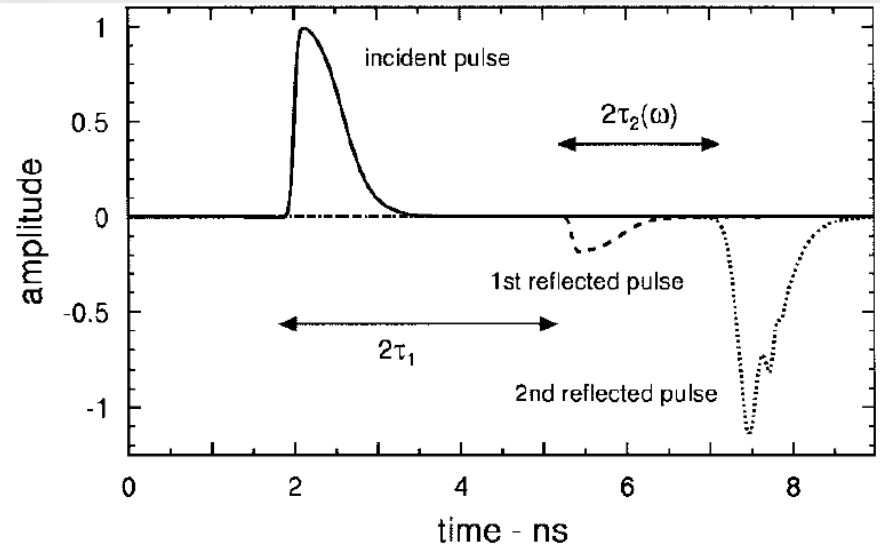

Fig. 3. The simulated incident and computed first and second reflected waveform components.

"One-port time-domain measurement of the approximate permittivity and permeability of materials" *IEEE Trans. Microw. Theory Tech.*, vol. 47, no. 5, pp. 551-555, May 1999.

Time-Frequency Effects: Hung et. al. (2002)

- Nonlinear distortion reduction by time-multiplexing

➢ working with optical cable television transmission…

➢ found a way to reduce IMD by transmitting subcarrier frequencies in different time slots

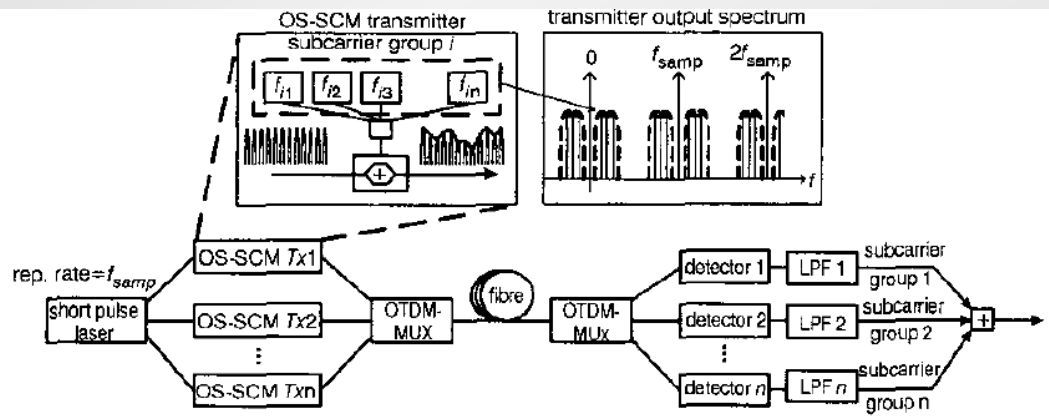

Fig. 1 *Nonlinear distortion reduction scheme using OS-SCM and OTDM*

Subcarriers are divided into M groups, each group may contain up to N subcarriers, $M>N$, $i \leq M$, $n<N$

"Optical sampled subcarrier multiplexing scheme for nonlinear distortion reduction in lightwave CATV networks," *Electronics Letters*, vol. 38, no. 25, pp. 1702-1704, Dec. 2002.