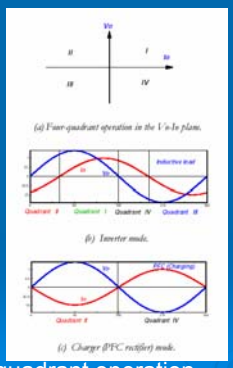

Four quadrant operation

Switching states of the inverter stage

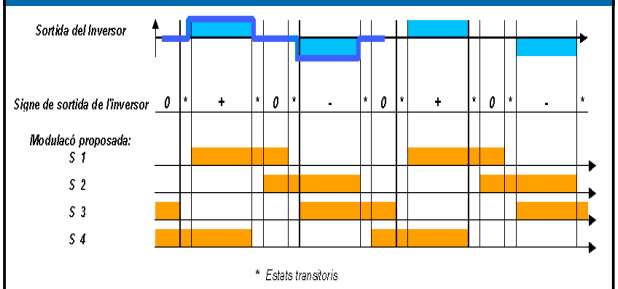

. *Blanking times are used to avoid short-circuit of the battery*

MOS-FET drivers sequence from the clock signal

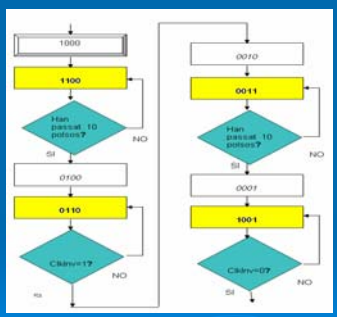

The control signals for the MOS_FET and IGBT drivers are designed in VHDL and implemented in a PLD.

"Steady-States" are represented in yelow-"Transient states" in white.-Clock control signals in green.

Active Voltage Clampers

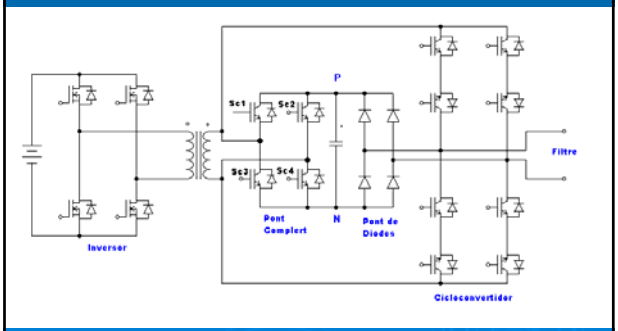

Active Voltage Clamper

2 Level Bidirectional VSI

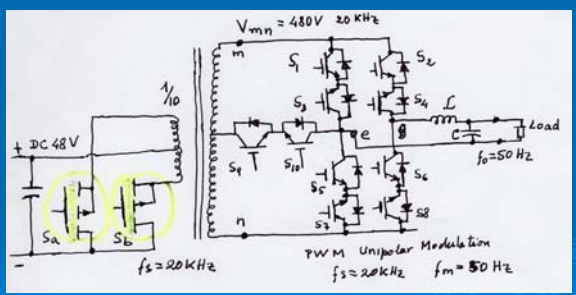

Converter prototyping

Photovoltaic Converters

Standards and Rules

Standards and Rules

Standards and Rules

- ***IEEE 1526(TM)* -TESTING STANDARD FOR STAND-ALONE PHOTOVOLTAIC SYSTEMS (Approved on *October 2003)***

  Allows Certification of Photovoltaic Systems for Remote Lighting, Pumping and Other Uses

Standards and Rules

- Related standards for Photovoltaic technologies include:
- IEEE1262(TM), which is concerned with how the photovoltaic module functions,
- IEEE 1361(TM), which addresses the batteries used in photovoltaic systems.

Note:All IEEE Photovoltaic standards are sponsored by the IEEE Standards Coordinating Committee (IEEE SCC21) on Fuel Cells, Photovoltaics, Dispersed Generation, and Energy Storage.

Standards and Rules

- **IEEE STANDARD ON INTERACTIONS BETWEEN ISLANDED POWER SYSTEMS AND AREA POWER GRIDS**
  IEEE 1547™, "Standard for Interconnecting Distribution Resources with Electric Power Systems,"

Standards and Rules

- IEEE P1547.3™, aids interoperability by offering guidelines for monitoring, information exchange and control among fuel cells, photovoltaics, wind turbines and other distributed generators interconnected by an electrical power system.

Standards and Rules

- IEEE P1547.4™, "Guide for Design, Operation, and Integration of Distributed Resource Island Systems with Electric Power Systems." "The standard addresses the many coordination issues involved in creating a safe and seamless interconnect between power utilities and islanded power generators."

Standards and Rules

- Acceptable Voltage Variation at
- Distribution Points (Low Voltage
- Consumers May See Wider Variations)

Country	Acceptable range
U.S.A.	±5 percent
France	±5 percent
U.K.	±6 percent
Spain	±7 percent

Standards and Rules

- **Allowable Step-Change in Voltages** a customer can cause by step loading or unloading

Country	Allowable range
France	±5 percent
U.K.	±3 percent
Germany	±2 percent
Spain	±2 percent for wind generators

- ±5 percent for embedded generators

Standards and Rules

- Renewable Power Generation Limit
- in Percent of the Grid Short Circuit
- Capacity at the Point of Interface

Country	Allowable limit
Germany	2 percent
Spain	5 percent
Other countries	Evolving

Source:Wind and Solar Power Systems-Mukund R. Patel-CRC Press

Costs and Economic Considerations for Photovoltaic Systems

Costs and Economic considerations for Photovoltaic systems

Subsidies in the Energy Market

- The International Energy Agency (IEA) defines energy subsidies as any government action which concerns primarily the energy sector and which lowers the cost of energy production, lowers the price paid by energy consumers or raises the price received by energy producers.

Pool Electrical Energy (Simulated Cost)

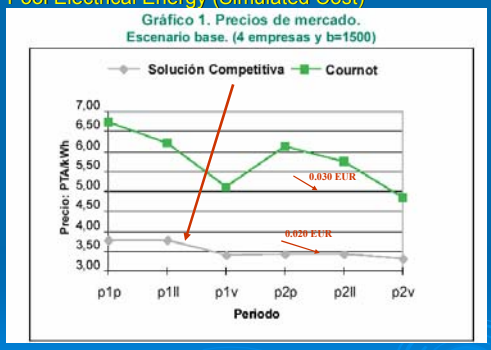

In Spain the Pool Electrical Energy Cost is Calculated by the CNSE-National Commission of the Electrical System

References

- UPC-Conferences and Ph.D. Course Lectures Juan Peracaula
  UPC Ph.D Thesis- Juan A. Beristain-2005
- UPC-Master Research Project- Joan Rocabert
- UPC-Master Research Project- Gerard Pujol
- UPC-Master Research Project- Montse Mata-Dumenjó
- UPC-Lectures on Photovoltaic Energy-Rafael Lamaison
- UPC-Lectures on Photovoltaic Energy-Josep Bordonau
- Trama TecnoAmbiental-Photos realisations.
  Volker Quaschning-Understanding Renewable Energy Systems-Earthscan,2005.
- International Energy Agency 2003 and several years
- Renewable Energy-G.T. Wrixon, A.-M.E. Rooney, W. Palz-Springer-Verlag
- Wind and solar Power Energy SystemsMukund R.Patel-CRC
- Renewable EnergyBent Sörensen-Elsevier Academic Press
- Practical Hnadbook of Photovoltaics-T.Markvart&L.Castañer-Elsevier

References

- Eficiència Energètica-Institut Català d'Energia-ICAEN-Generalitat de Catalunya.
- Photon International:The Photovoltaic Magazine-Solar Verlag GmbH-Aachen-germany