What You Don't Know About Ground Fault Protection Can Negatively Affect You and Your Equipment

S. Frank Waterer – EE Fellow, Schneider Electric Engineering

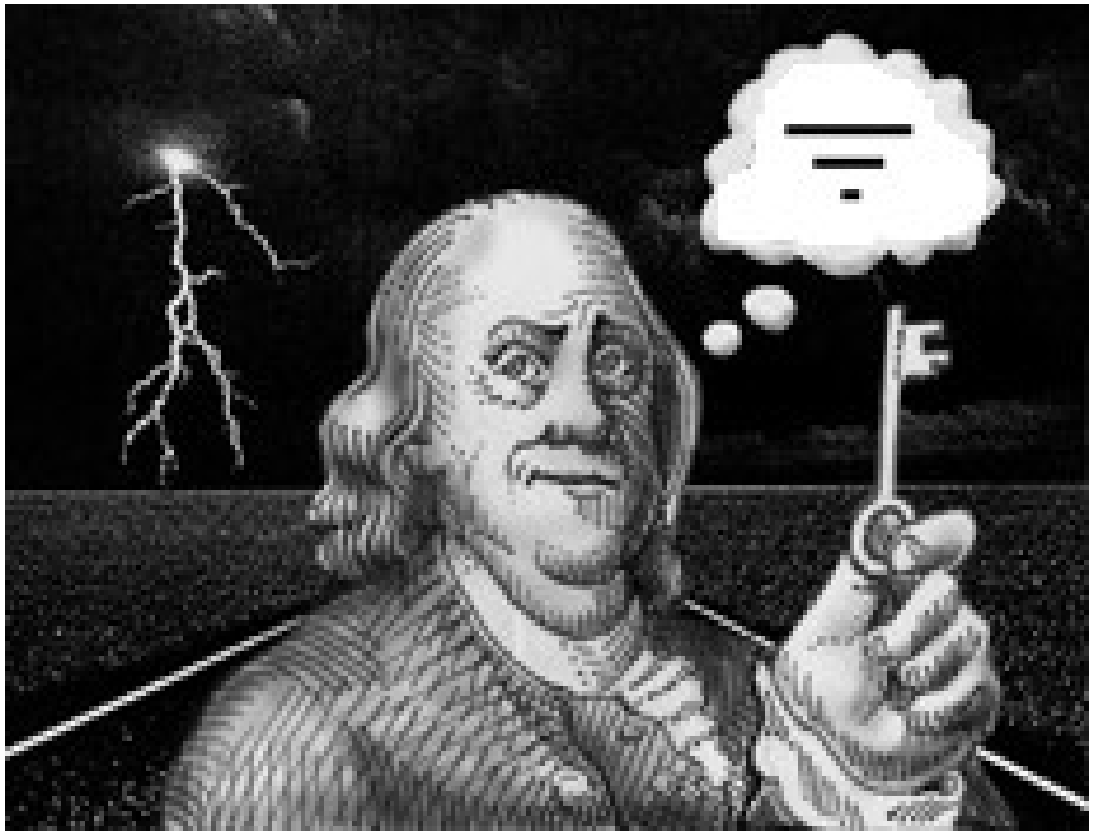

a brand of Schneider Electric

SQUARE D

Why Ground Faults Matter, Part I

- The overwhelming majority of all faults that occur on all power systems are Line-to-Ground faults
  - **Estimates – 95% to > 98% of the total**

Why Ground Faults Protection Systems Matter ? - Part II

The Five Purposes of a Bonding & Grounding System

The principal purposes for an “effectively bonded grounding system via a low impedance path to earth” are to provide for the following:

- Provide for an applicable reference to earth to stabilize the system voltage of a power distribution system during normal operations.
- Create a very low impedance path for ground-fault current to flow in a relatively controlled path.
- Create a very low impedance path for ground fault current flow in order for overcurrent protective devices and any ground fault protection systems to operate effectively and satisfactorily as designed and intended.
- Limit differences of potential, potential rise, or step gradients between equipment and personnel, personnel and earth, equipment and earth, or equipment to equipment.
- Limit voltage rise or potential differences imposed on a power distribution system from lightning, a surge event, any phase-to-ground fault conditions, or the inadvertent commingling of or the unintentional contact with different voltage system.

Prerequisites for Proper Operation of a GF Protection System

- Effective ground-fault return path
  - **Proper construction / installation**
  - **Effective bonding & grounding connections**
- Properly designed and installed GFP relaying system
- Correct and Effective Commissioning and Testing Program after installation
- Effective Maintenance and Testing Program

System Configuration

The *system configuration* of any Power Distribution System is based strictly on how the secondary windings of the Power Class Transformer, or generator, *supplying* the Service Entrance Main or loads, are configured. (This includes whether or not the windings are referenced to earth.)

The system configuration is ***not*** based on how any specific load or equipment is connected to a particular power distribution system.

Ground Fault Protection System

A *designed, coordinated, functional, and properly installed* system that provides protection from electrical faults or short circuit conditions that result from any unintentional, electrically conducting connection between an ungrounded conductor of an electrical circuit and the normally non–current-carrying conductors, metallic enclosures, metallic raceways, metallic equipment, or earth.

Ground Fault Protection of Equipment

(Per Article 100 in the 2008 NEC)

A system intended to provide protection of equipment from damaging line-to-ground fault currents by operating to cause a disconnecting means to open all ungrounded conductors of the faulted circuit. This protection is provided at current levels less than those required to protect conductors from damage through the operation of a supply circuit overcurrent device.

Effective Ground-Fault Current Path
(per Article 250-2 in the 2008 NEC)

"An intentionally constructed, [permanent,]* low-impedance electrically conductive path designed and intended to carry current under ground-fault conditions from the point of a ground fault on a wiring system to the electrical supply source and that facilitates the operation of the overcurrent protective device or ground fault detectors on high-impedance grounded systems."

* - Deleted in the 2008 NEC

Ground Fault

(per Article 250-2 in the 2008 NEC)

"An unintentional, electrically conducting connection between an ungrounded conductor of an electrical circuit and the normally non–current-carrying conductors, metallic enclosures, metallic raceways, metallic equipment, or earth."

Ground Fault Current Path
(per Article 250-2 in the 2008 NEC)

"An electrically conductive path from the point of a ground fault on a wiring system through normally non–current-carrying conductors, equipment, or the earth to the electrical supply source."

FPN: Examples of ground-fault current paths could consist of any combination of equipment grounding conductors, metallic raceways, metallic cable sheaths, electrical equipment, and any other electrically conductive material such as metal water and gas piping, steel framing members, stucco mesh, metal ducting, reinforcing steel, shields of communications cables, and the earth itself.

There are two (2) types of ground-fault protection.

1. Personnel Protection

- GFCI = Ground Fault Circuit Interruption
- GFCI devices operation is much less than GFP for Equipment
- Current requires for operation range between 5mA and 15mA
- For branch-circuit applications

Where You Might See GFCI Protection

- Residences / Hotels – in kitchen / bathroom areas, or on outdoor outlets
- On the jobsite – for power tools
- For protection of high-value inventory

LIVE BAIT
LIVE BAIT
PROPANE EXCHANGE
NO SMOKING
FLAMMABLE GAS

2. Equipment Protection

- Normal Capacitive Charging Current Exceeds 100mA.
- Primarily Employed at Services and on Feeder Circuits
- Employed in some Applications on Sub-Feeder or Branch Circuits
- Is Intended to Protect Equipment **(Not Intended to Protect People)**

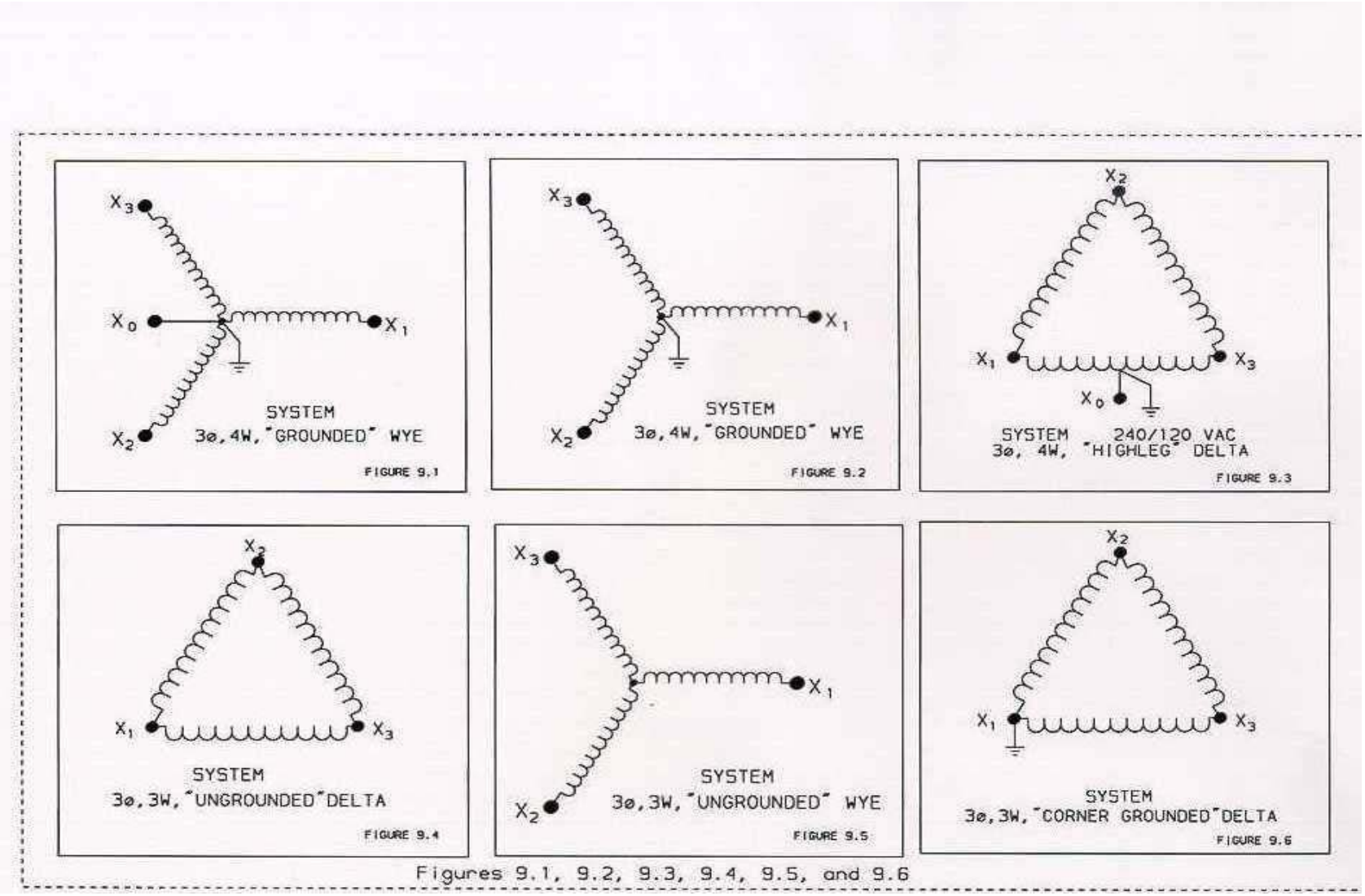

Figures 9.1, 9.2, 9.3, 9.4, 9.5, and 9.6

1971 NEC - GFP requirements were first introduced in the NEC in 1971.

(Section 230-95 made system GFP a must for any grounded “WYE” electrical service with more than 150 VAC to ground , but not exceeding 600 VAC “phase-to-phase” for any disconnecting means rated 1000A or more. The ground fault relaying was to operate at fault current values of 1200A or more.)

1975 NEC

- Limited GFP requirements to “solidly” grounded “WYE” services
- Defined the service disconnecting means
- (“The rating of the largest fuse that can be installed or the highest trip setting for which the actual overcurrent device installed in a circuit breaker is rated or can be adjusted”.)
- The maximum setting of the GFP was limited to 1200A.
- Section 517-41 required an additional level of selectively coordinated GFP in health care facilities.

What is “Solidly Grounded”?

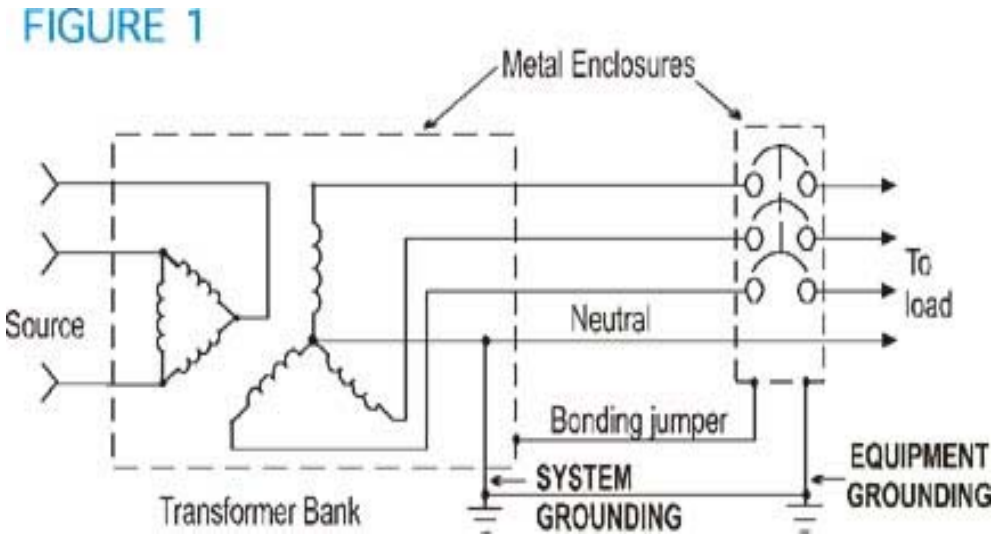

“Connected to ground without inserting any resistor or impedance device."

Allows maximum Ground Fault current to flow

1978 NEC

- Added provision for time delays
- (“The maximum time delay shall be one second for ground-fault currents equal to or greater than 3000 amperes”.)
- Exempted continuous industrial process plants from GFP requirements. (Where a non-orderly shutdown will introduce additional or increased hazards.)
- Provided cautions when interconnections are made with another power supply. (Additional means or devices may be needed where interconnection is made with another supply system by a transfer device.)

1978 NEC (continued)

- Outline the required testing of the GFP in Section 230-95C.
- Located Section 517-41 in the 1975 NEC to Section 517-13 in the 1978 NEC.

1984 NEC

- Added definition of GFP into Article 100

- "A system intended to provide protection of equipment from damaging line-to-ground arcing faults currents by operating to cause a disconnecting means to open all ungrounded conductors of the faulted circuit. This protection is provided at current levels less than that required to protect conductors from damage through the operation of a supply circuit overcurrent device."

What is a “Grounded Conductor”?

FIGURE 1

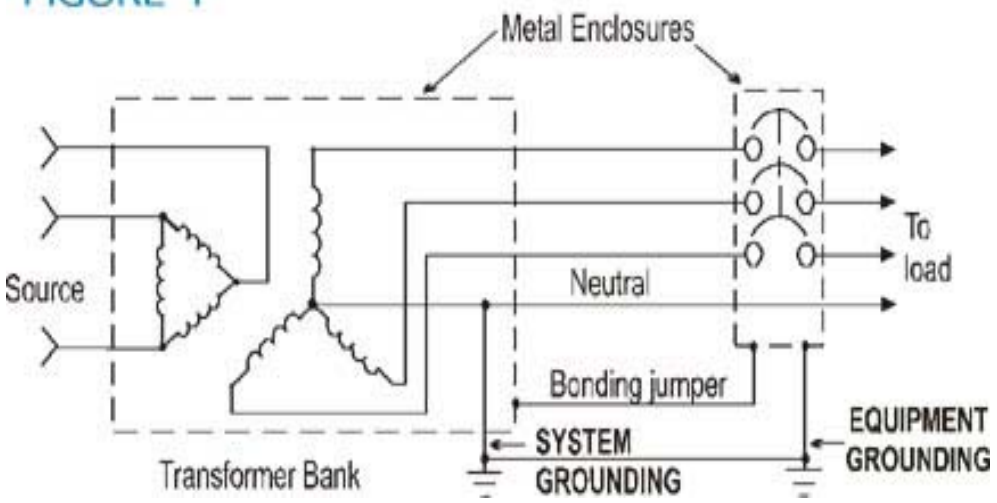

“A system or circuit conductor that is intentionally grounded."

A “grounded conductor” carries current during “normal” operations of the power distribution system.

The “grounded conductor” is the neutral conductor.

The “Ground Wire” is not a “Grounded” conductor!

1990 NEC

- Article 215-10 was added to require ground fault protection for feeders.
- “A feeder disconnect rated 1000A or more in a solidly grounded “WYE” system with greater than 150 VAC to ground shall have GFP.”

1990 NEC (continued)

- Article 240-13 extends the requirements of Article 230-95 to each building disconnects regardless of how the disconnects are classified.

- "Each main disconnect in a building or structure that is rated 1000A or more in a solidly grounded "WYE" system with greater than 150 VAC to ground shall have GFP."

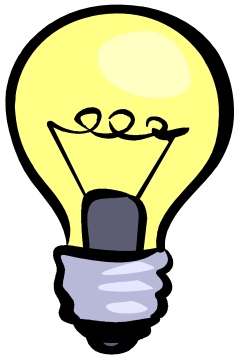

In addition to the NEC, electrical equipment manufacturers use several other national standards and codes in the development and use of ground fault protection components and circuits. The following are examples.

UL 891

- This standard governs the design of all aspects of switchboard construction and manufacturing including ground fault protection.

UL 1053

- This standard governs the components associated with ground fault protection.

UL 1558

- This standard governs the design of all aspects of switchgear construction and manufacturing including ground fault protection.

NEMA PB2.2

- This standard provides an application guide for ground fault protection devices for equipment.

- Engineering guides and recommended practices available to consulting engineers on grounding and ground fault protection are as follows.

ANSI/IEEE Std. 80

- This standard provides a guide for safety in AC substation grounding.

ANSI/IEEE Std. 141

- This standard provides for recommended practices for electrical power distribution for industrial plants.

ANSI/IEEE Std. 142

- This standard provides recommended practices for grounding of industrial and commercial power systems

ANSI/IEEE Std. 241

- This standard provides recommended practices for electric power systems in commercial buildings.

ANSI/IEEE Std. 242

- This standard provides recommended practices for protection and coordination of industrial and commercial power systems.

ANSI/IEEE Std. 602

- This standard provides recommended practices for electric systems in health care facilities.

ANSI/IEEE 1100

This standard provides recommended practices for powering and grounding sensitive electronic equipment.

Ground-Fault Protection of Equipment
(per Article 230-95 in the 2008 NEC)

"Ground-fault protection of equipment shall be provided for solidly grounded wye electrical services of more than 150 volts to ground but not exceeding 600 volts phase-to-phase for each service disconnect rated 1000 amperes or more. The grounded conductor for the solidly grounded wye system shall be connected directly to ground through a grounding electrode system, as specified in 250.50, without inserting any resistor or impedance device.

The rating of the service disconnect shall be considered to be the rating of the largest fuse that can be installed or the highest continuous current trip setting for which the actual overcurrent device installed in a circuit breaker is rated or can be adjusted."

Setting for Ground-Fault Protection
(per Article 230-95(A) in the 2008 NEC)

"The ground-fault protection system shall operate to cause the service disconnect to open all ungrounded conductors of the faulted circuit. The maximum setting of the ground-fault protection shall be 1200 amperes, and the maximum time delay shall be one second for ground-fault currents equal to or greater than 3000 amperes."

Ground-Fault Protection of Equipment

(NECH Commentary for Article 230-95(A) in the 2008 NEC)

"The maximum setting for ground-fault sensors is 1200 amperes. There is no minimum, but it should be noted that settings at low levels increase the likelihood of unwanted shutdowns. The requirements of 230.95 place a restriction on fault currents greater than 3000 amperes and limit the duration of the fault to not more than 1 second. This restriction minimizes the amount of damage done by an arcing fault, which is directly proportional to the time the arcing fault is allowed to burn.

Care should be taken to ensure that interconnecting multiple supply systems does not negate proper sensing by the ground-fault protection equipment. A careful engineering study must be made to ensure that fault currents do not take parallel paths to the supply system, thereby bypassing the ground-fault detection device. See 215.10, 240.13, 517.17, and 705.32 for further information on ground-fault protection of equipment."

Testing the Ground-Fault Protection System (per Article 230-95(C) in the 2008 NEC)

"**The ground-fault protection system shall be performance tested when first installed on site**. The test shall be conducted in accordance with instructions that shall be provided with the equipment. A written record of this test shall be made and shall be available to the authority having jurisdiction."

[The requirement for ground-fault protection system performance testing is a result of numerous reports of ground-fault protection systems that were improperly wired and could not or did not perform the function for which they were intended. This Code and qualified testing laboratories require a set of performance testing instructions to be supplied with the equipment. Evaluation and listing of the instructions fall under the jurisdiction of those best qualified to make such judgments, the qualified electrical testing laboratory (see 90.7). If listed equipment is not installed in accordance with the instructions provided, the installation does not comply with 110.3(B).]

Effective Ground-Fault Current Path
(per Article 250-4(A)(5) in the 2008 NEC)

"Electrical equipment and wiring and other electrically conductive material likely to become energized shall be installed in a manner that creates a *[permanent]*,* low-impedance circuit facilitating the operation of the overcurrent device or ground detector for high-impedance grounded systems. It shall be capable of safely carrying the maximum ground-fault current likely to be imposed on it from any point on the wiring system where a ground fault may occur to the electrical supply source. The earth shall not be considered as an effective ground-fault current path."

* - deleted in 2008 NEC

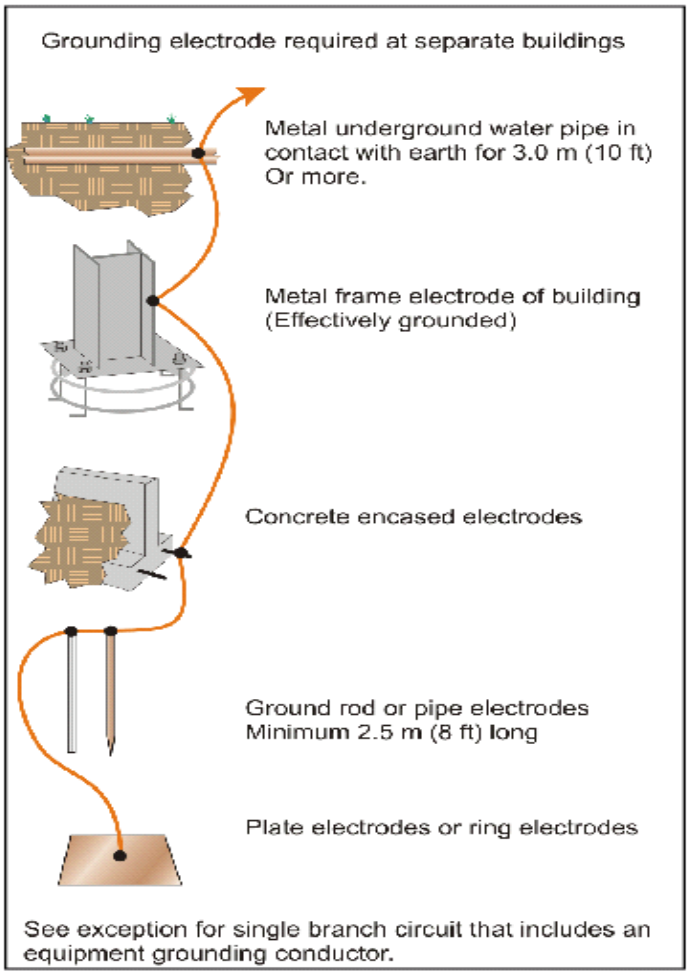

Figure 2. A grounding electrode(s) is generally required at separate buildings or structures.

The principal purpose of an **"effectively bonded grounding system via a low impedance path to earth"** is intended to provide for;

1. **Provide for an applicable reference to earth to stabilize the system voltage of a power distribution system during normal operations.**

2. **Create a very low impedance path for phase-to-ground fault current to flow in a "controlled and predicable path".**

3. **Create a very low impedance path for ground fault current to flow in order for overcurrent protective devices and any ground fault protection systems to operate effectively as designed and intended.**

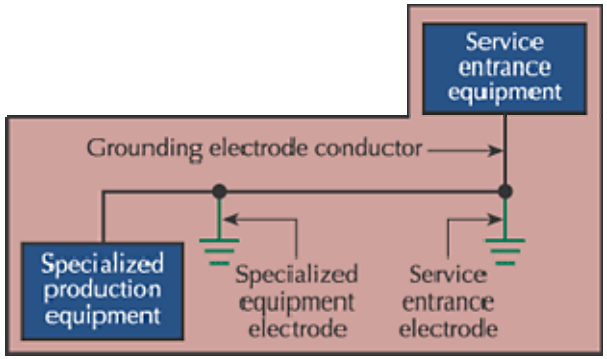

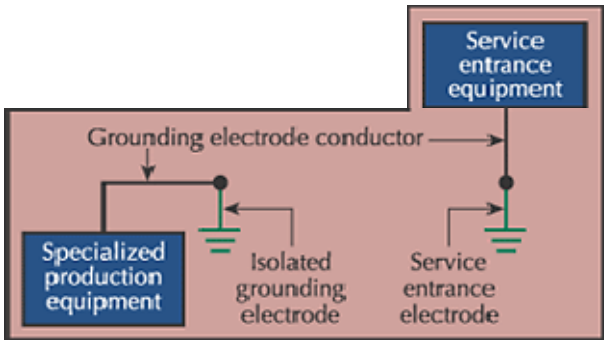

The principal purpose of an 'effectively bonded grounding system via a low impedance path to earth" is intended to provide for;

4. **Limit differences of potential, potential rise, or step gradients between equipment and personnel, personnel and earth, equipment and equipment, equipment and earth, or equipment and equipment.**

5. **Limit voltage rise or potential differences imposed on a power distribution system from lightning event, surge event, phase-to-ground fault conditions, inadvertent commingling of different voltages, or the unintentional contact with different voltage system.**

There are basically three categories or type of relaying systems associated with power distribution protective relaying. They are;

1. POSITIVE SEQUENCE RELAYING

2. NEGATIVE SEQUENCE RELAYING

3. ZERO SEQUENCE RELAYING

Symmetrical Components

$$\begin{bmatrix} V_a \\ V_b \\ V_c \end{bmatrix} = \begin{bmatrix} 1 & 1 & 1 \\ 1 & a^2 & a \\ 1 & a & a^2 \end{bmatrix} \begin{bmatrix} V_0 \\ V_1 \\ V_2 \end{bmatrix}$$

$$\begin{bmatrix} V_0 \\ V_1 \\ V_2 \end{bmatrix} = \frac{1}{3} \begin{bmatrix} 1 & 1 & 1 \\ 1 & a & a^2 \\ 1 & a^2 & a \end{bmatrix} \begin{bmatrix} V_a \\ V_b \\ V_c \end{bmatrix}$$

Symmetrical Components

Perfectly Balanced System:

$I_0 = 1/3(I_a + I_b + I_c) = 0$

No I_n, No I_g

Unbalanced System:

$I_n > 0$

Faulted System:

$I_g > 0$

Ground fault protection systems are Zero Sequence Relaying type and work in coordination with the commonly joined and effectively bonded grounding system to sense abnormal current flows and initiate the opening of the appropriate overcurrent protective device.

In Zero Sequence Relaying the vector sum of all of the current magnitudes of each phase conductor is compared with the current magnitude of the neutral conductor associated with the same circuit. If the vector sum of the two values do not equal zero, then the difference in current magnitude will cause an equivalent current to flow in the operating coil of a ground fault protective relay.

$$I_a + I_b + I_c + I_n = ????$$

During an imbalance current flow in a three phase, four wire circuit, due to an imbalanced loading of a power distribution system, there should not be an operation of any ground fault protective relay.

$$I_a + I_b + I_c + I_n = 0 \text{ -> No operating current}$$

However, during an actual phase-to-ground fault condition the current flow in the phase conductors does not vector sum or equal to the current flow in the associated neutral conductor and the operating coil of the ground fault protective relay is initiated.

$$I_a + I_b + I_c + I_n > 0 \text{ -> operating current}$$

There are three basic types of sensor arrangement used to sense abnormal current flow in a Zero Sequence Relaying Scheme. They are;

A. Zero Sequence Sensing – Where one sensor is employed to surround all phase conductors and neutral conductor.

Example: GC-200 GFR with a GT Sensor

B. Modified Zero Sequence Sensing – Where one sensor is employed to surround all phase conductors and a separate sensor surrounding the neutral sensor.

Example: GFM used on “F” & “K” Frame Circuit Breakers

C. Residual Sequence Sensing – Where one sensor surrounds each phase conductor and neutral conductor.

Example: MICROLOGIC Circuit Breakers

Zero Sequence Sensing

Current sensors or current transformer are external to disconnecting device

Usually associated with a separate and externally mounted Ground Fault Relay

No internal relationship to disconnect to be operated. All GFP components are externally mounted.

Disconnect requires a shunt trip coil

Requires a separate and reliable source of control power. (Weakest Link)

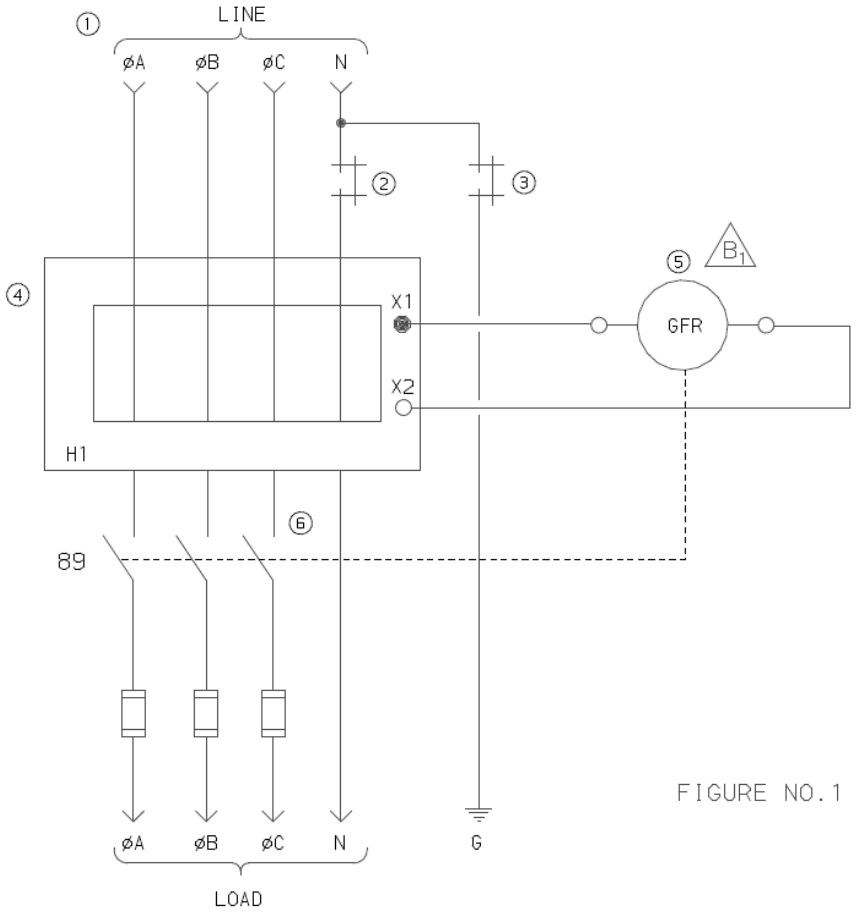

FIGURE NO.1

B2

1. UTILITY OR CUSTOMER TRANSFORMER OR GENERATOR
2. NEUTRAL DISCONNECT LINK
3. MAIN BONDING JUMPER (GROUND DISCONNECT LINK)
4. TYPE GT CURRENT SENSOR
5. EXTERNALLY MOUNTED GROUND FAULT RELAY
6. TYPE BP SWITCH (SERVICE ENTRANCE MAIN)

Residual Sequence Sensing

Phase sensors are usually internal to protective device to be operated.

Ground fault relaying is usually performed internal to protective device or circuit breaker to be operated.

No external control power supply required. Protective device or circuit breaker is "self-powered".

Self powered residual sequence sensing GFP is referred to as *Integral Ground Fault Protection*.

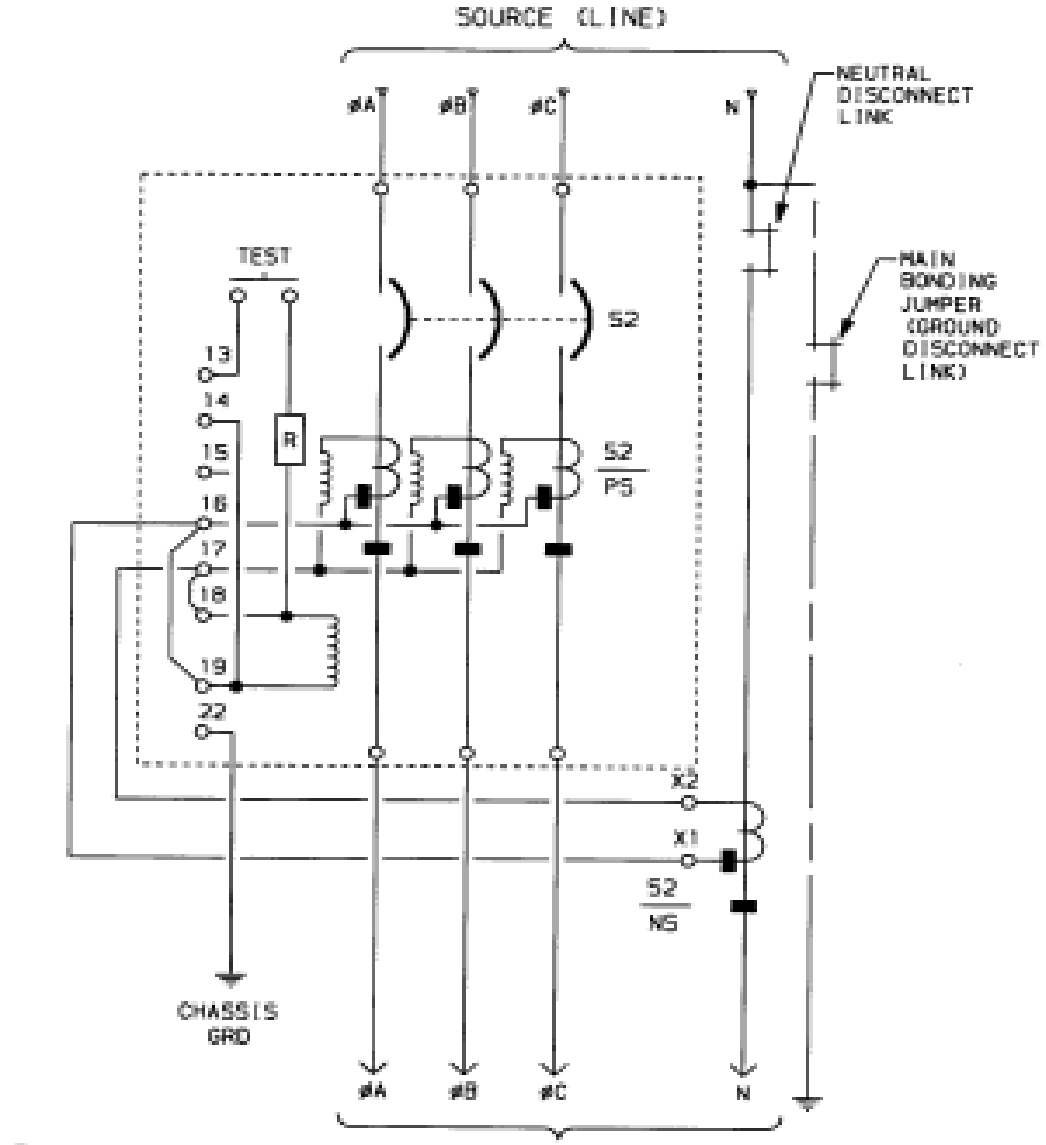
SOURCE (LINE)
øA
øB
øC
N
NEUTRAL DISCONNECT LINK
MAIN BONDING JUMPER (GROUND DISCONNECT LINK)
TEST
52
13
14
R
15
52/PS
16
17
18
19
22
X2
X1
52/NS
CHASSIS GRD
øA
øB
øC
N
LOAD

FIGURE NO. 1

"Beyond the Minimum"

- NEC requires GF protection, but only one level except for Health-Care facilities
- GF at Main Over Current Protective Device only (circuit breaker or fused power switch) – is all that's required in other facilities
- Is this wise? Is this cost-effective?

Multiple Sources Originate from the Interconnection of;

- Two or More Utility (ESP) Transformers
- Transformers and Generators
- Generators and Generators
- Transformers and UPS Units
- Generators and UPS Units
- Transformer, Generators, UPS Units connected to;

Multiple PV Units and Wind Generators

Two or more sources of power connected to the switchboard or switchgear.

Separate Main Circuit Breakers

Tie Circuit Breakers

Separate Load Busses

Neutral Bus associated with each power source are interconnected together.

Multiple neutral-to-ground bonds via the connection of multiple System Bond Jumpers and Main Bonding Jumpers (MBJ).

The interconnection of multiple grounding conductors on the line side of the main circuit breakers can function as a parallel neutral bus.

Multiple current paths for imbalanced neutral currents and ground fault currents to flow.

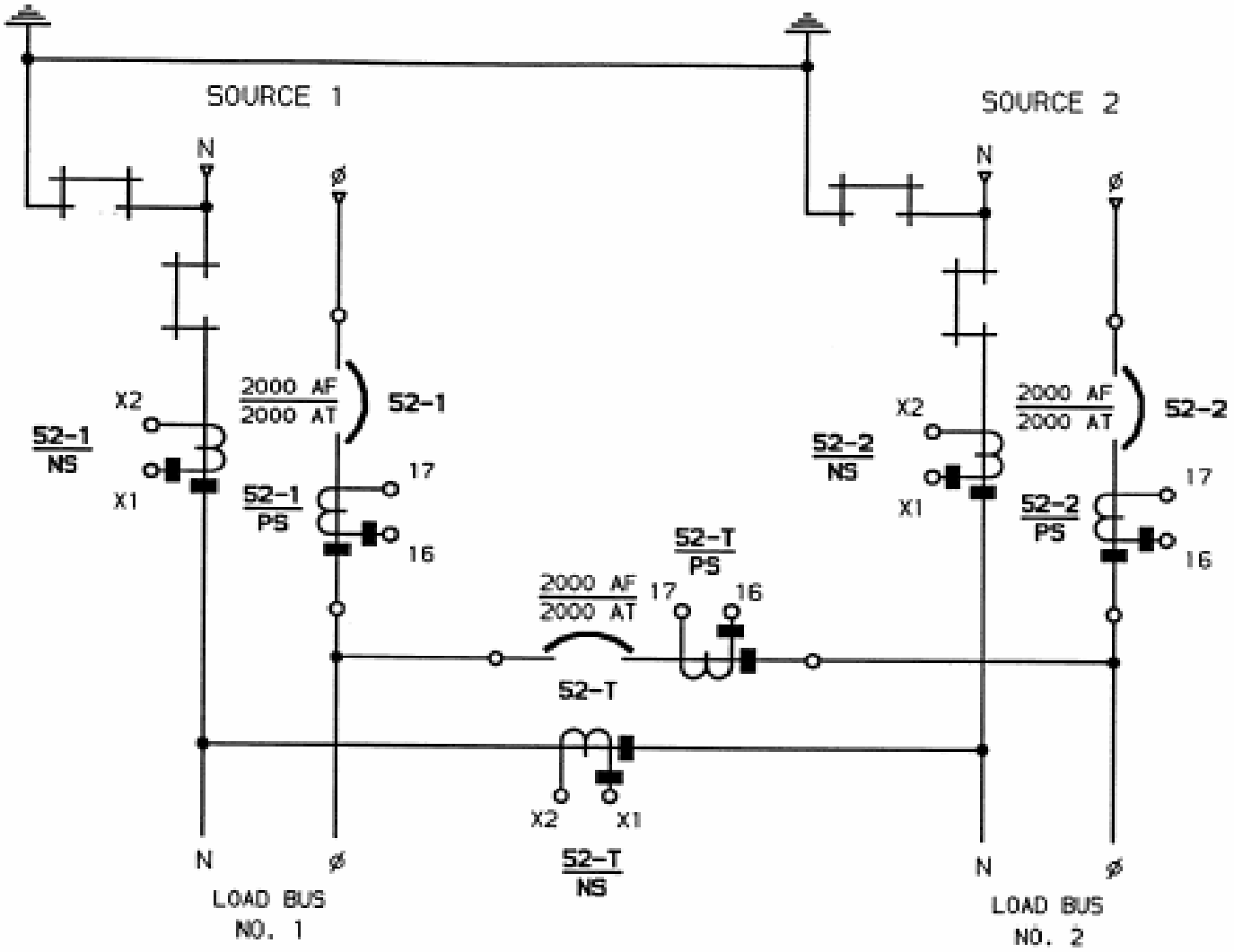
SOURCE 1
SOURCE 2
N
ø
X2
X1
2000 AF
2000 AT
52-1
52-1
NS
52-1
PS
17
16
52-2
52-2
NS
52-2
PS
52-T
PS
52-T
52-T
NS
LOAD BUS
NO. 1
LOAD BUS
NO. 2

THE Basic Problem

"Care should be taken to ensure that interconnecting multiple supply systems does not negate proper sensing by the ground-fault protection equipment. A careful engineering study must be made to ensure that fault currents do not take parallel paths to the supply system, thereby bypassing the ground-fault detection device. See 215.10, 240.13, 517.17, and 705.32 for further information on ground-fault protection of equipment." – NECH, commentary on 230.95(A)

Multiple current paths mean that simple residual ground-fault sensing is no longer adequate. Can lead to:

- Nuisance tripping from the flow of normal imbalance neutral currents.
- No tripping during an actual GF event

Commonly Employed GFP Solutions For PDS with Multiple Sources to Avoid Installing MDGF Systems

- 4P breakers and 4P ATS (the devices provide limited benefits because of their limited applications.)

- Playing the "Click & Pick" Game to select GF settings until circuit breaker stop nuisance tripping.

- A GFP System designed to properly sense GF currents during all normal and abnormal operating states

- **MDGF (Modified Differential Ground Fault) Protection Systems provide the most reliable means to provide effective GFP in multiple source PDS.**

Problems with the Application of 4P Circuit Breakers and 4P ATS as an Attempted Solution to Resolve GFP Issues

- 4P devices do NOT provide a solution if they employed in “closed-transition” operations.

- The operation of 4P devices changes the configuration of the PDS and too often have negative effects on protective coordination of devices.

- The present of existing 4P devices are rarely considered when existing PDS is modified by the connection of additional sources and loads.

- The power sources to 4P ATS Units are often bonded and grounded at different potentials relative to the earth plane.

- The SC ratings of 4P ATS Units are often under rated for available GF Currents.

Problems with the Application of 4P Circuit Breakers and 4P ATS as a Solution to GFP Issues

- Cost adder for 4P devices versus 3P devices

- 4P circuit breakers are not “common” in the North American market. Therefore, such circuit breakers require custom bussing design at electrical equipment manufacturer facilities.

- 4P devices require wider enclosures and take up more space within the designed electrical rooms.

- 4P devices incur additional maintenance cost.

- 4P devices are more complex mechanical devices and contain more mechanical parts that added more parts that can wear out or become inoperative.

Benefits and Purposes of MDGF Protection Systems

- Can sense and properly sum all of the phase and neutral currents which circulate through and within a multiple source power distribution system at all times during normal and abnormal conditions.
- Prevents nuisance tripping of circuit breakers from the flow of imbalanced currents from imbalanced loads during normal PDS operations.
- Prevents nuisance tripping of circuit breakers from the flow circulating currents into and out of the switchboard or switchgear during “closed transition” operations.
- Opens all of the appropriate circuit breakers closest to the faulted location within a switchboard or switchgear and provides improved selectivity.
- Provides for the effective sectionalization and isolation of effected load busses when a fault occurs within a zone of protection. The unaffected zones remain energized and in service.

Benefits and Purposes of MDGF Protection Systems

- Allows for all main and tie circuit breaker to have the exact same GF pickup setting and GF time delay settings. This allow for enhanced coordination with downstream protective devices.
- Aids in limiting equipment damage from GF conditions.
- Can be easily modified in the future to incorporate additional sources and loads.
- An effective means to address the technical issues of “objectionable currents” and satisfies the intent and requirements of NEC Article 250.6(A)(4) – “Take other suitable remedial and approved action”.

Considerations

- Additional system design considerations compared to a simple residual system
- Initial onsite performance testing is much more involved
- Troubleshooting is much more complex if not performed by qualified and trained personnel.
- Like any GFP System the regular maintenance and routine testing of any MDGF Protection Systems are highly important!

Before a MDGF for a Main-Tie-Main Switchboard can be configured the following must be evaluated.

A. Type of circuit breaker?

1. The internal sensors and ground fault relaying are not always configured the same.

B. Frame size of the circuit breaker?

1. Different frame size breakers often have different C.T. ratios.

2. Different series circuit breakers can have the frame size and C.T. ratios, but different instantaneous C.T. polarities.

C. How are the circuit breakers supplied with power?

1. Are the circuit breakers top feed?

2. Are the circuit breakers bottom feed?

D. Are the circuit breakers “fixed” or “draw out” type?

The MDGF must be maintained when any circuit breaker is open or removed from its cell (drawn out).

E. Is the tie circuit breaker (52T) specified to ground fault protection?

1. “Non-Relayed” Tie Circuit Breaker has no GF Protection

2. “Relayed” Tie Circuit Breaker has GF Protection

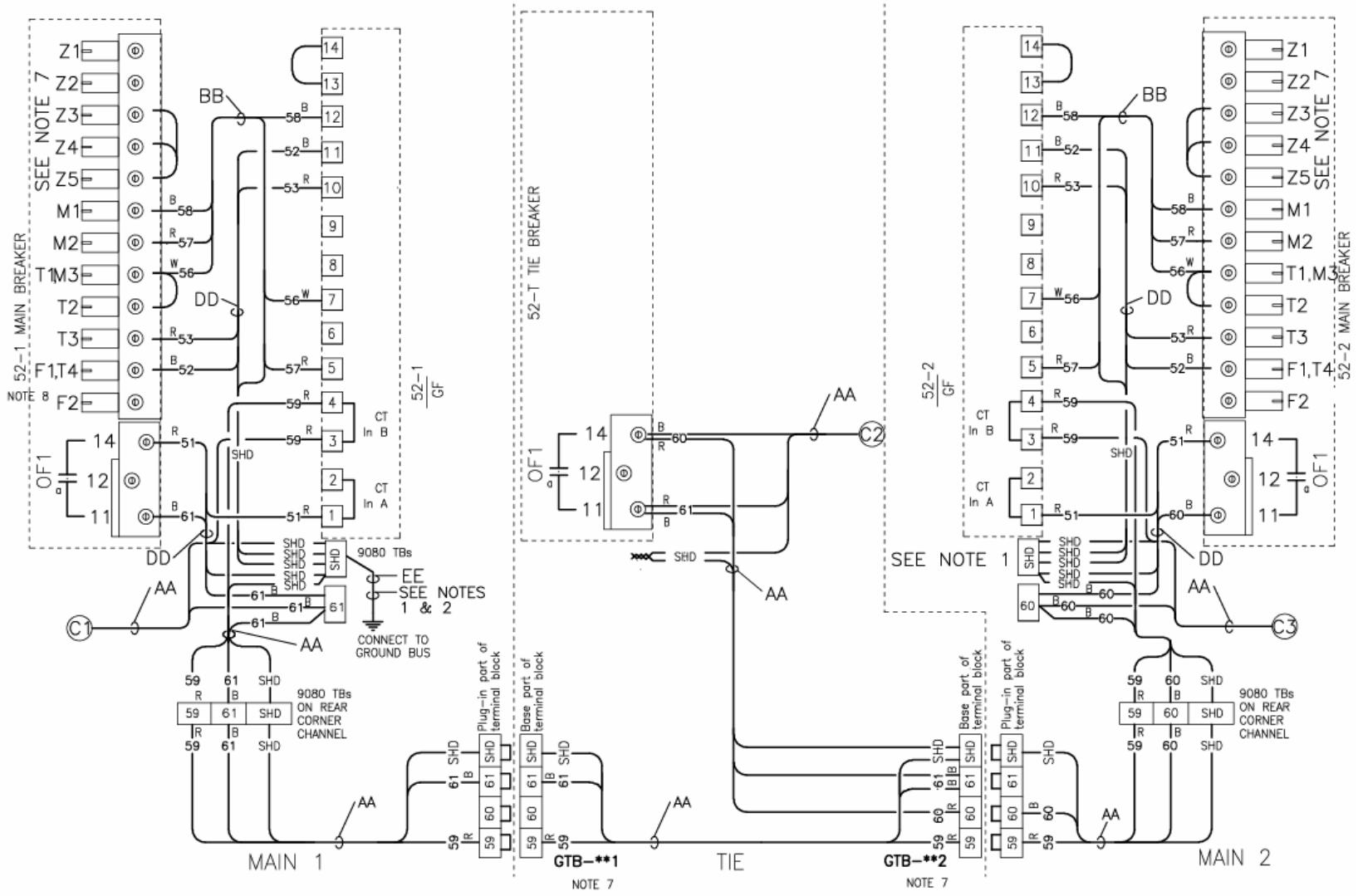
52-1 MAIN BREAKER
SEE NOTE 7
NOTE 8
Z1
Z2
Z3
Z4
Z5
M1
M2
T1,M3
T2
T3
F1,T4
F2
52-1 GF
CT In B
CT In A
OF1
BB
DD
AA
EE
SEE NOTES 1 & 2
9080 TBs
CONNECT TO GROUND BUS
C1
9080 TBs ON REAR CORNER CHANNEL
Plug-in part of terminal block
Base part of terminal block
MAIN 1
52-T TIE BREAKER
C2
GTB-**1
NOTE 7
TIE
GTB-**2
NOTE 7
52-2 GF
SEE NOTE 1
C3
52-2 MAIN BREAKER
MAIN 2

Sample Testing Program - MTM

Table 3: Main-Tie-Main Relayed Test Procedure Log

Test No.	Jumper Connection	Circuit Breaker Status			Injection Current	Expected Results	Actual Results		
		MAIN 1	TIE	MAIN 2			Phase A	Phase B	Phase C
1	Phase of LOAD BUS 1 to Neutral of LOAD BUS 1	Closed	Open	Closed	1000 A	"No Trip" MAIN 1 Circuit Breaker			
2	Phase of LOAD BUS 1 to Ground of LOAD BUS 1	Closed	Open	Closed	1000 A	"Trip" MAIN 1 Circuit Breaker			
3	Phase of LOAD BUS 2 to Neutral of LOAD BUS 2	Closed	Closed	Open	1000 A	"No Trip" MAIN 1 Circuit Breaker "No Trip" TIE Circuit Breaker			
4	Phase of LOAD BUS 2 to Ground of LOAD BUS 2	Closed	Closed	Open	1000 A	"No Trip" MAIN 1 Circuit Breaker "Trip" TIE Circuit Breaker			
5	Phase of LOAD BUS 2 to Neutral of LOAD BUS 2	Closed	Open	Closed	1000 A	"No Trip" MAIN 2 Circuit Breaker			
6	Phase of LOAD BUS 2 to Ground of LOAD BUS 2	Closed	Open	Closed	1000 A	"Trip" MAIN 2 Circuit Breaker			
7	Phase of LOAD BUS 1 to Neutral of LOAD BUS 1	Open	Closed	Closed	1000 A	"No Trip" MAIN 2 Circuit Breaker "No Trip" TIE Circuit Breaker			
8	Phase of LOAD BUS 1 to Ground of LOAD BUS 1	Open	Closed	Closed	1000 A	"No Trip" MAIN 2 Circuit Breaker "Trip" TIE Circuit Breaker			

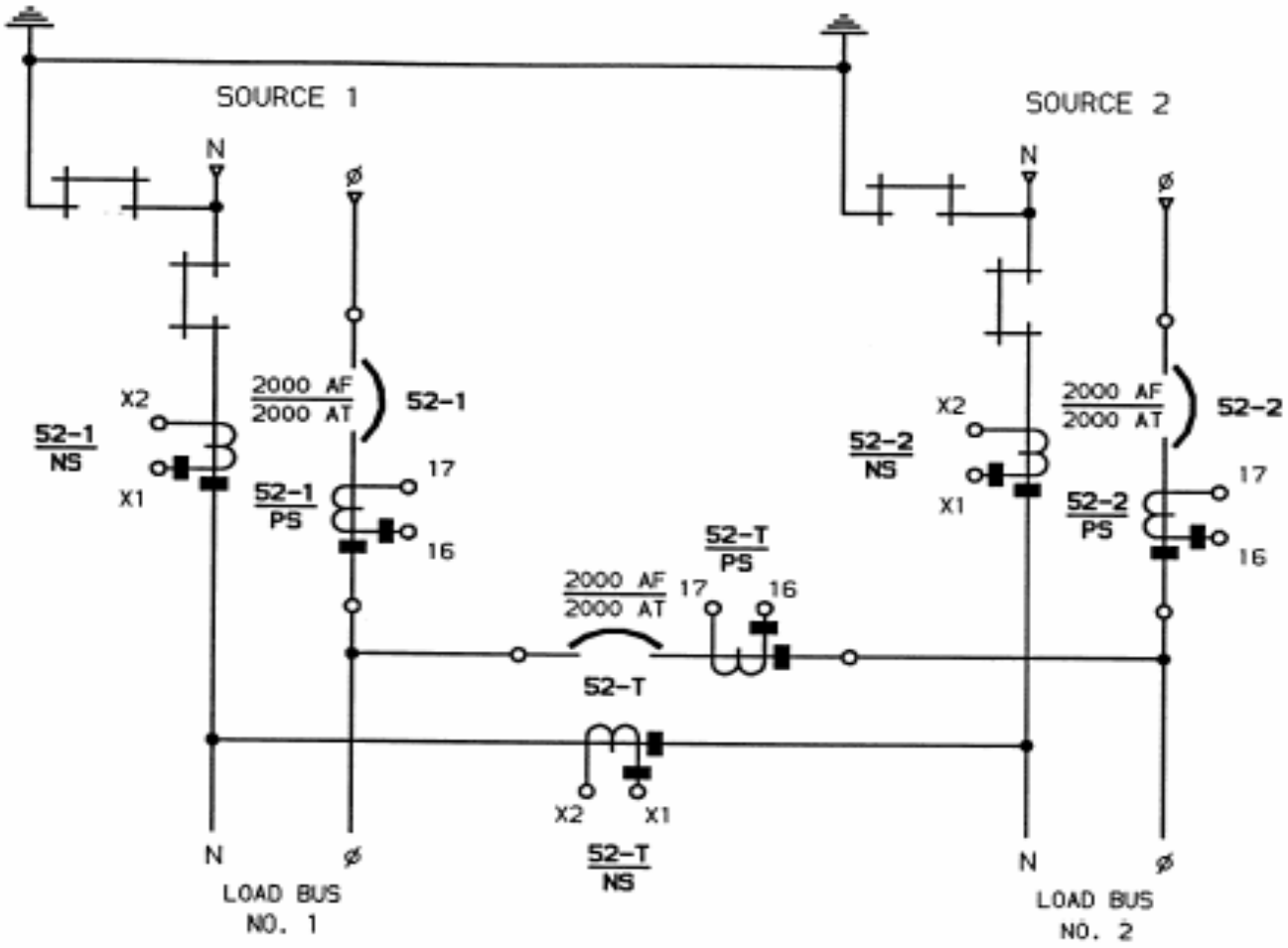

A “Plain Jane” M-T-M System!

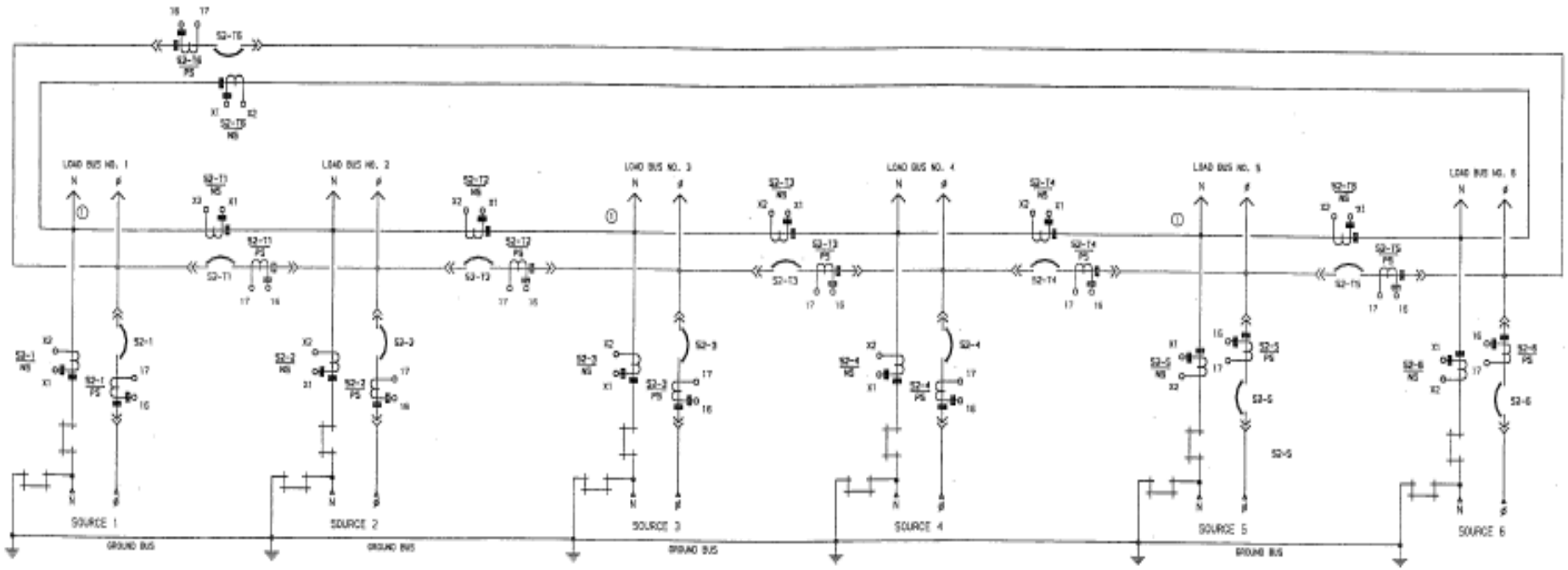

A “M-T-M-T-M-T-M-T-M-T-M-T” System!

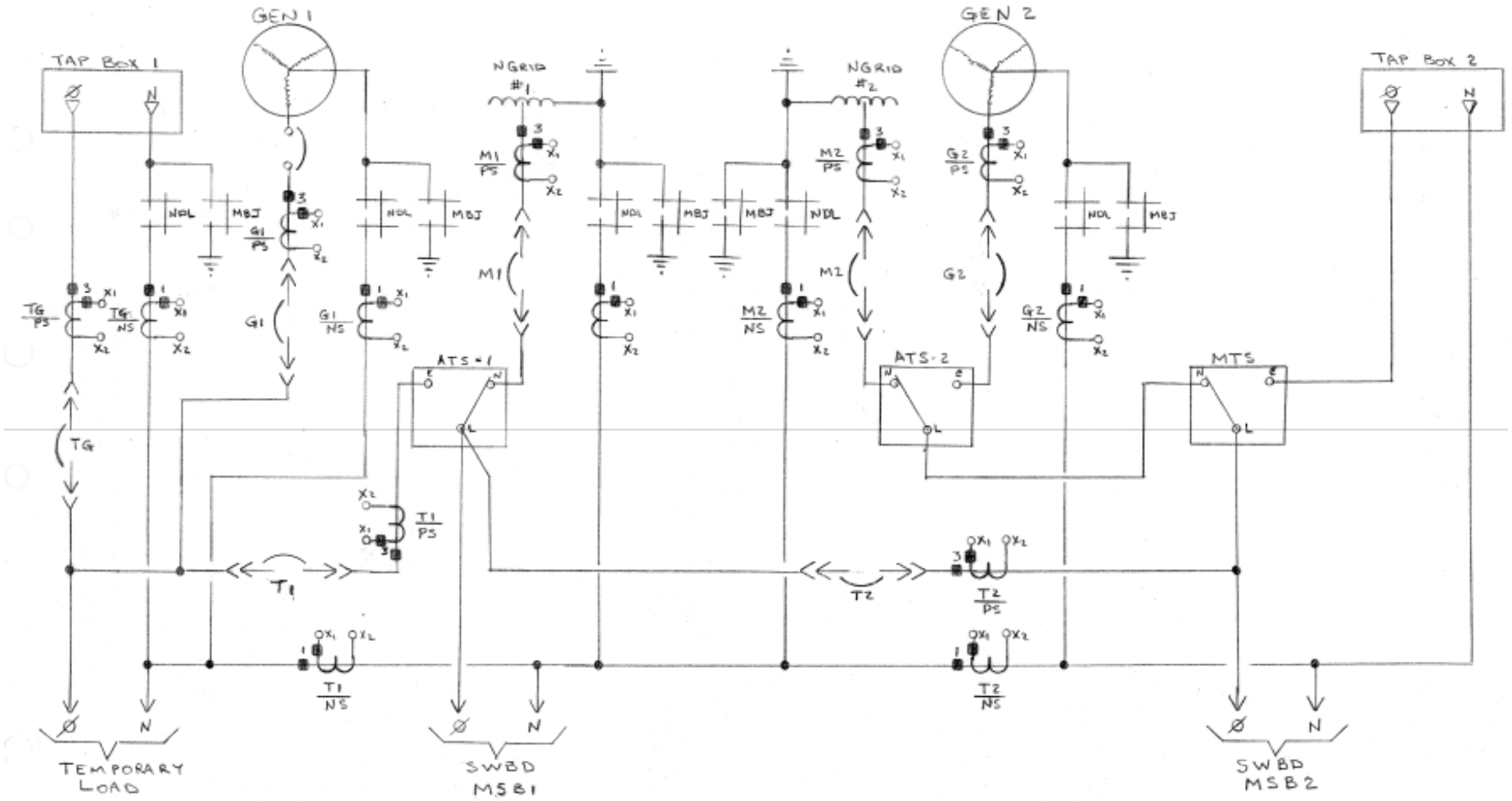

A Common Complex System!

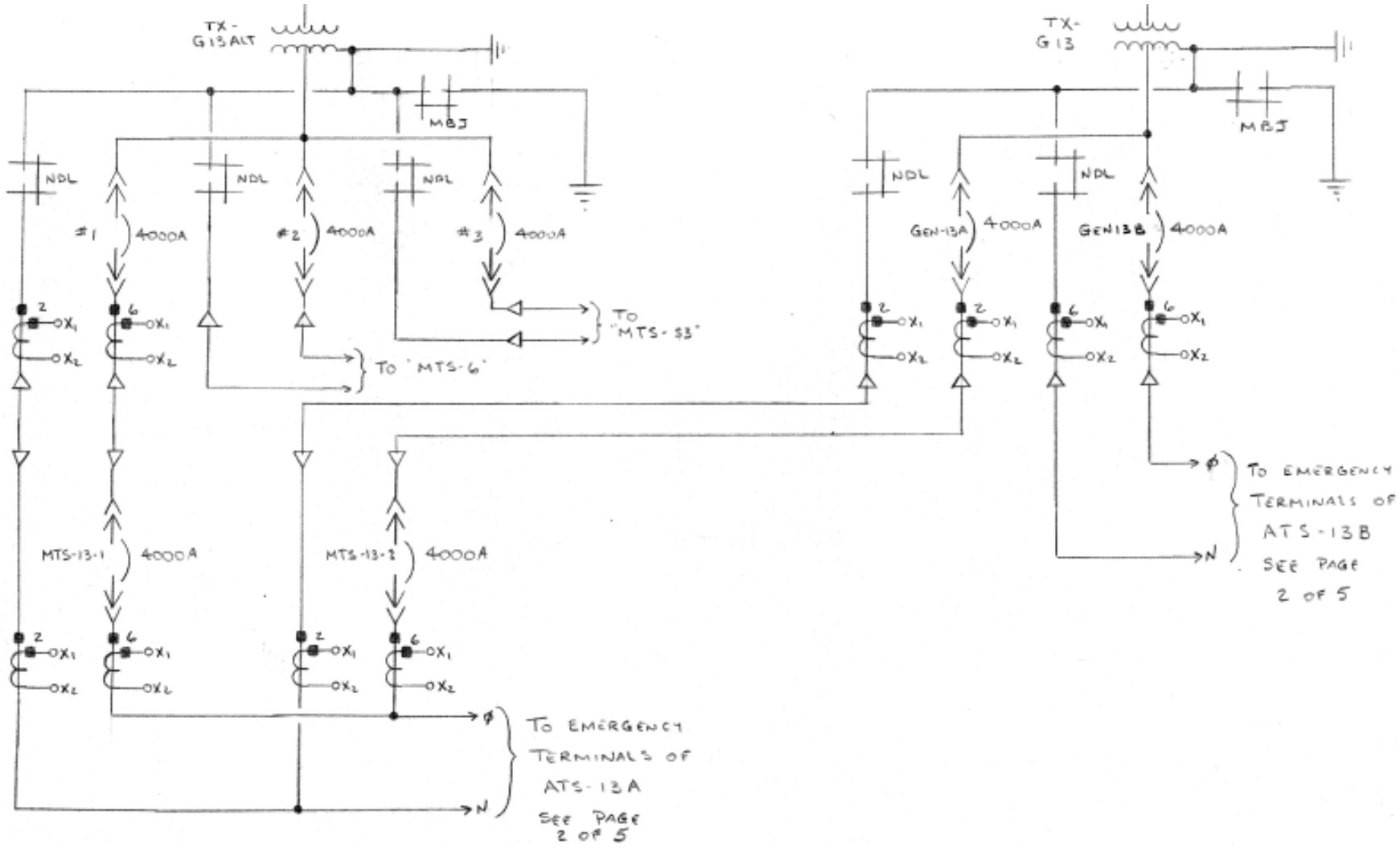

Another Common Complex System – Part 1!

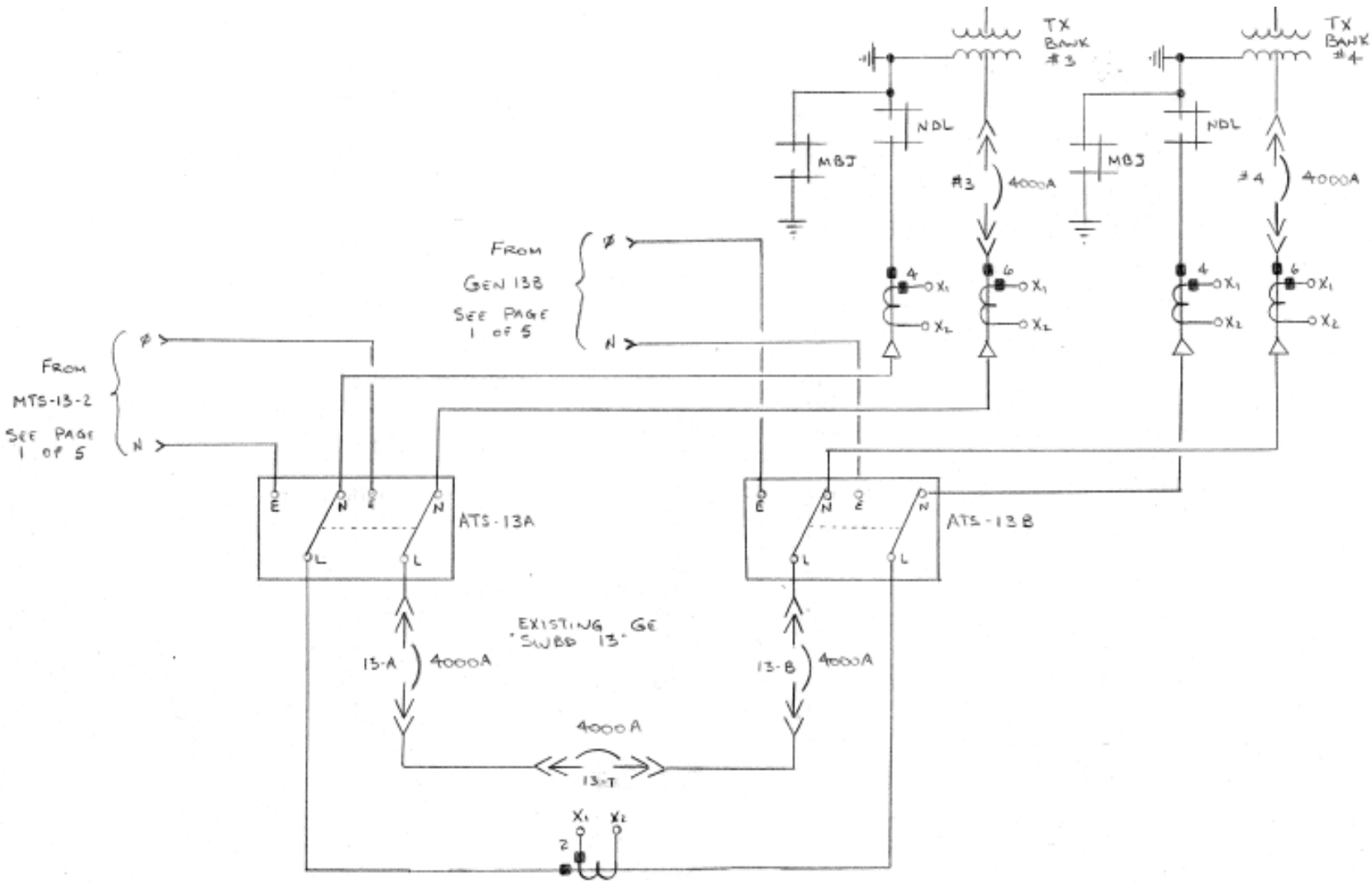

Another Common Complex System – Part 2!

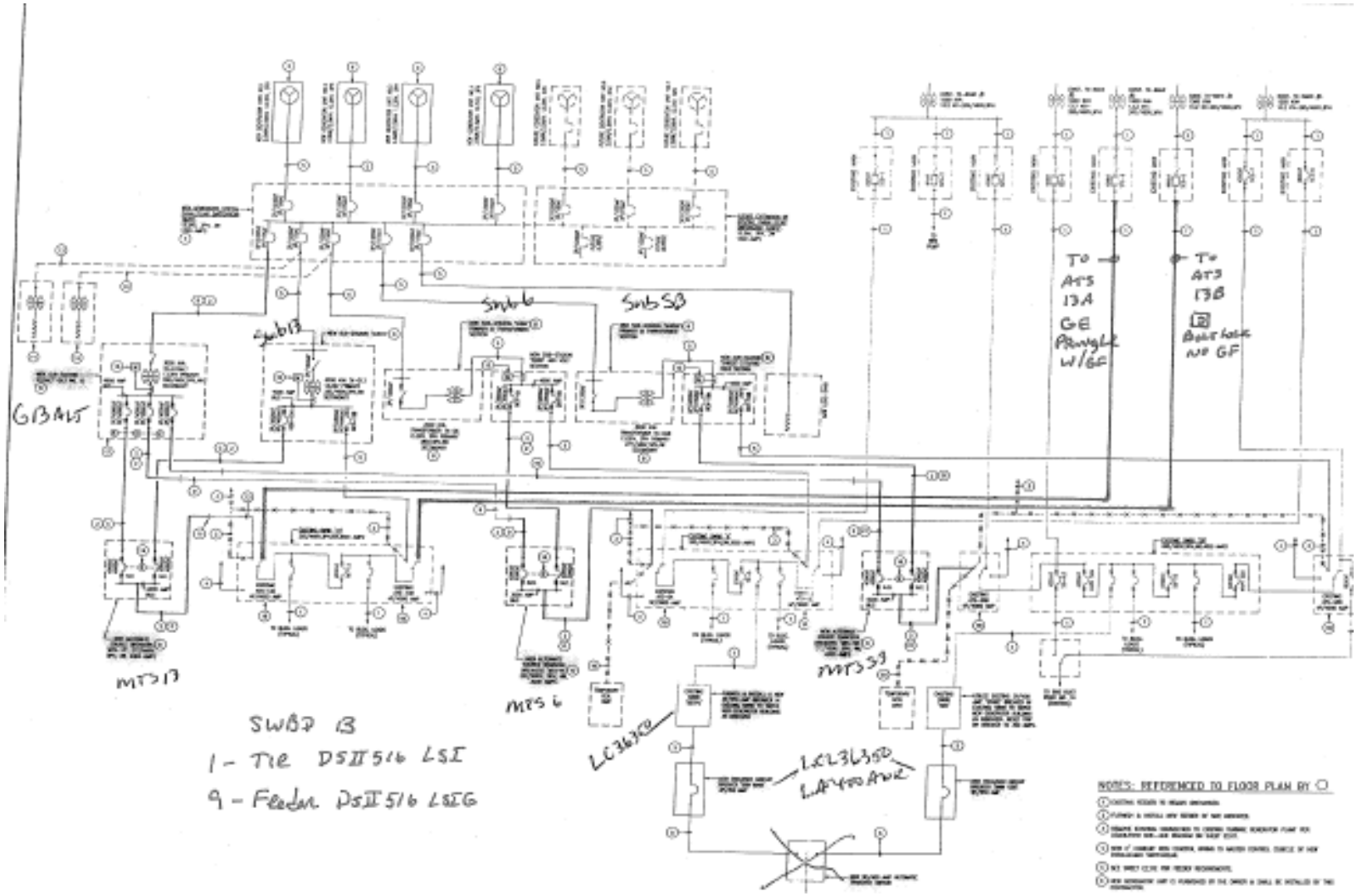

The Larger View of a Complex System!

An Even More Complex System!

"Phase 1" Where 10 MVA from Transformers will be "Closed Transitioned" on a Routine Bases with 10MVA from "Legally Required" Standby Generators.

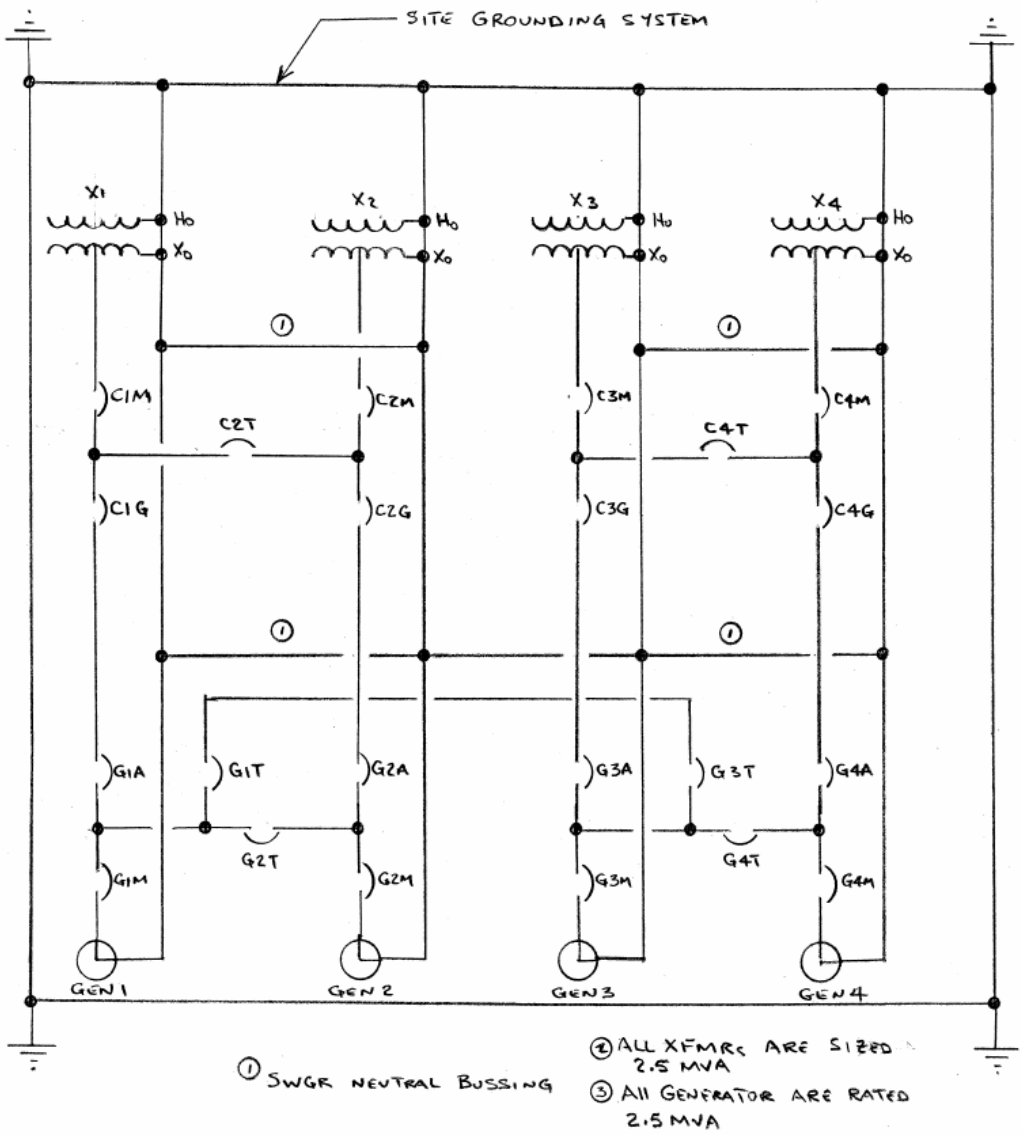

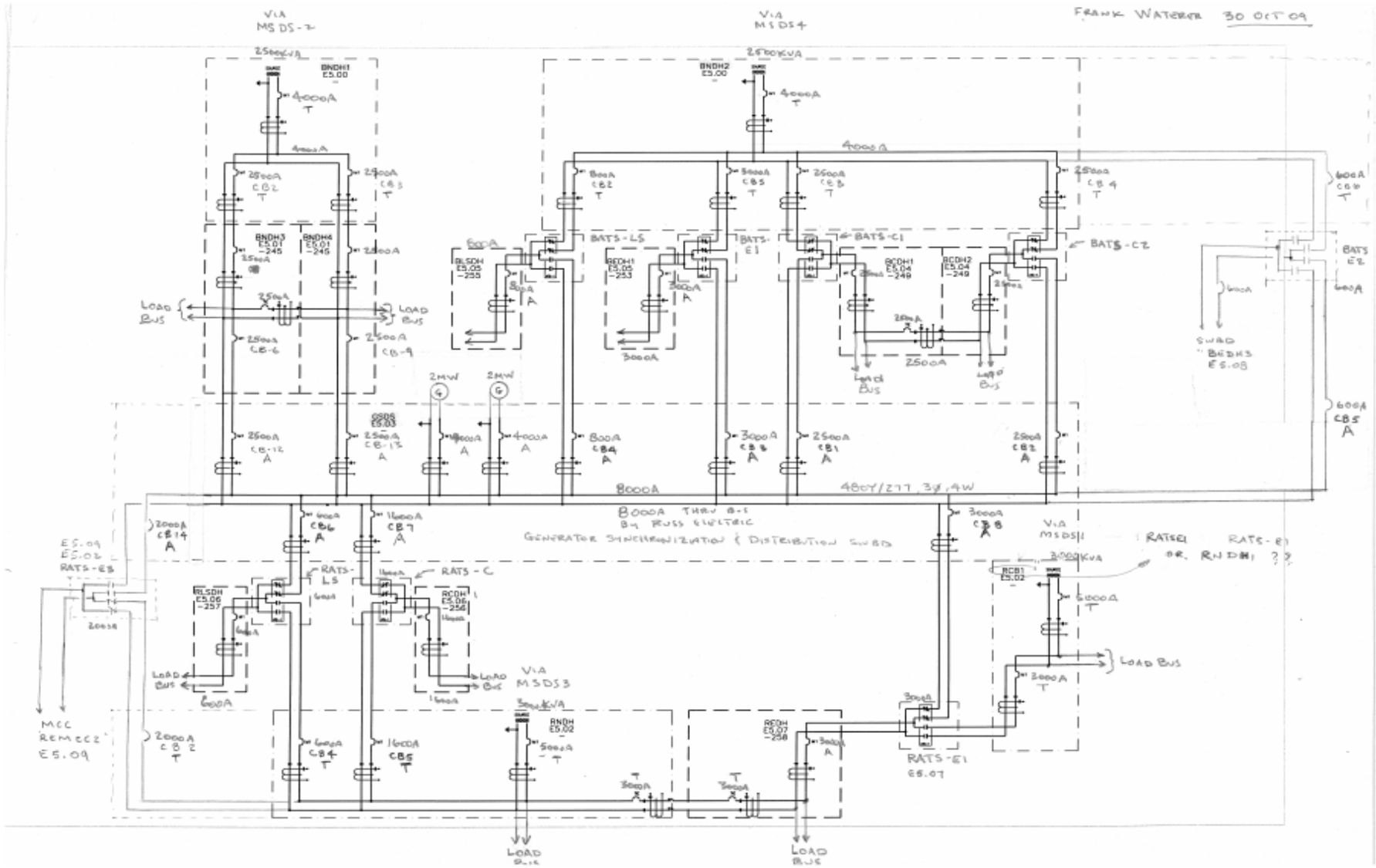

It Just Keeps Getting More Interesting!

Single Source or “Ground Source” Return Systems

1. Requires that the Xo terminal of the three phase, four wire system be grounded in one, and only one, point.

2. Not commonly employed in most power distribution system within the USA where a local electrical service provider (utility) provides the distribution class or power class transformer to the building or facility.

3. A single ground fault current sensor is installed around the main bonding jumper.

4. Very easy to defeat or completely desensitize any ground fault protection.

5. Can not provide for multiple zones of protection.

Ground Fault Indication Systems

1. Only provides local or remote indication after a phase-to-ground fault condition has occurred. There is no tripping or opening of circuit breakers to interrupt the faulted condition.

2. Such system must be continually monitored by trained and qualified personnel.

3. Such system often result in total power outages.

4. Such system often result in building fires, serious equipment damages, injuries, and death.

5. Such system are not advised or recommended for commercial or public facilities.

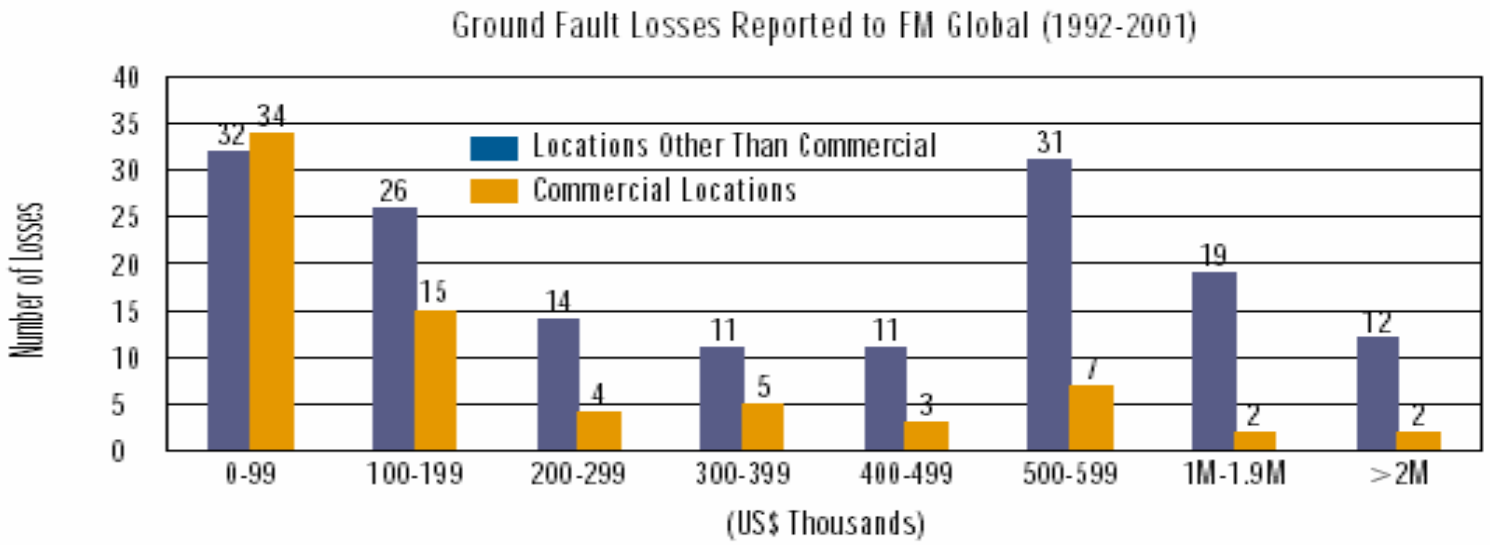

Per FM Global - One Major Loss (Claim)
Every Two Weeks

Summary

Phase-to-ground faults are the most common form of electrical faults. (95% to 98%)

Ground faults are the most destructive type of electrical fault.

Contrary to popular belief or some marketing publications, fuses do NOT provide selective coordination from most phase-to-ground faults.

For a current limiting fuse to limit current as designed and intended a fault must be a “bolted fault”. Current limiting fuses do not coordinate well during high impedance faults.

Multiple levels of ground fault protection provide the best form of selective coordination from phase-to-ground fault condition.

Complex ground fault protection systems (MDGF) require a specific level of electrical engineering expertise.

The NEC is a minimum construction and installation “requirement” document.

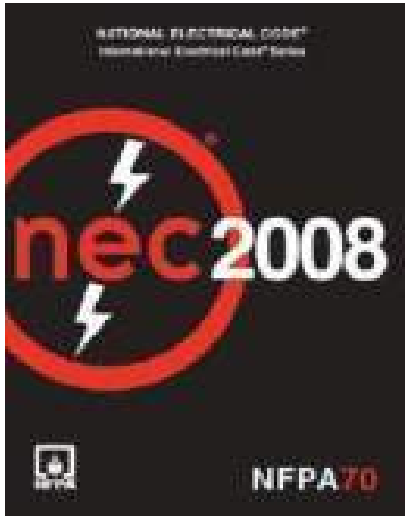

The NEC is NOT a design or performance standard .

“Minimum requirements” are often insufficient for the construction and installation of mission critical facilities as Data Centers, Communication Centers, Hospitals and Medical Centers, Research Centers, Universities, Industrial Plants, Military Facilities, Prisons, and Transportation Centers, or Critical Operation Centers.

Conclusion

Conclusion

Thank you

for your attention