Ultra Low Power Analog Integrated Circuits for Implantable Medical Devices

Fernando Silveira

Universidad de la República, Uruguay

CCC Medical Devices

nanoWattICs

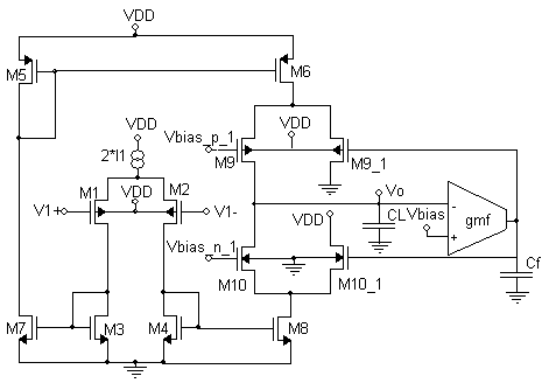

Objectives of this talk

- Introduce the needs and characteristics of Active Implantable Medical Devices (AIMDs) from the circuit designer point of view.
- Present the techniques and circuits applied in Analog ULP
  - Device Modeling
  - Design Methodology
  - Circuit techniques
- Show the current research and development topics and prospects of the area

Engineering School
Universidad de la Republica

Wikipedia

Collins/Fing

Wikipedia

- Founded 1888, approx. 1k new students / year, 670 teaching staff

Microelectronics Group

- Since 1991
- Under Graduate & Graduate Teaching (MSc, PhD)
- Research
  - Design of Analog / RF and Mixed-Signal Integrated Circuits, particularly Ultra-Low Power (ULP)
  - Also works on ULP Digital / DC-DC and Embedded
  - Strong links with Research groups abroad
- Industrial Experience
  - Implantable Medical Devices
- **2007: spin-off: NanoWattICs**

Implantable Devices in Uruguay

Feb. 3, 1960: Drs. O. Fiandra and R. Rubio performed the first effective pacemaker implant to a human being in the world.

1969: Dr. O. Fiandra founded CCC to develop and manufacture pacemakers

1999: CCC develops a pacemaker line based on an DDDR ASIC designed by the Microelectronics Group of Universidad de la Republica

Today: CCC designs and manufactures active implantable devices and complete medical systems for third parties.

Outline

I. System: Active Implantable Medical Devices Today

II. Transistors and Circuits: Analog Design for ULP.

- Transistor Modeling.
- Design Methodology.

III. Circuit Techniques: Implementation of AIMDs blocks

IV. Conclusions and Prospects

Active Implantable Medical Devices (AIMD)

- Implantable: Introduced inside the body by a medical procedure and intended to remain there after the procedure.
- Active: Including a Power Source
- Not considered here:
  - Passive implants (e.g. bone prostheses, valves, stents)
  - Wearable / Portable / Swallowable (!) Active Medical Devices

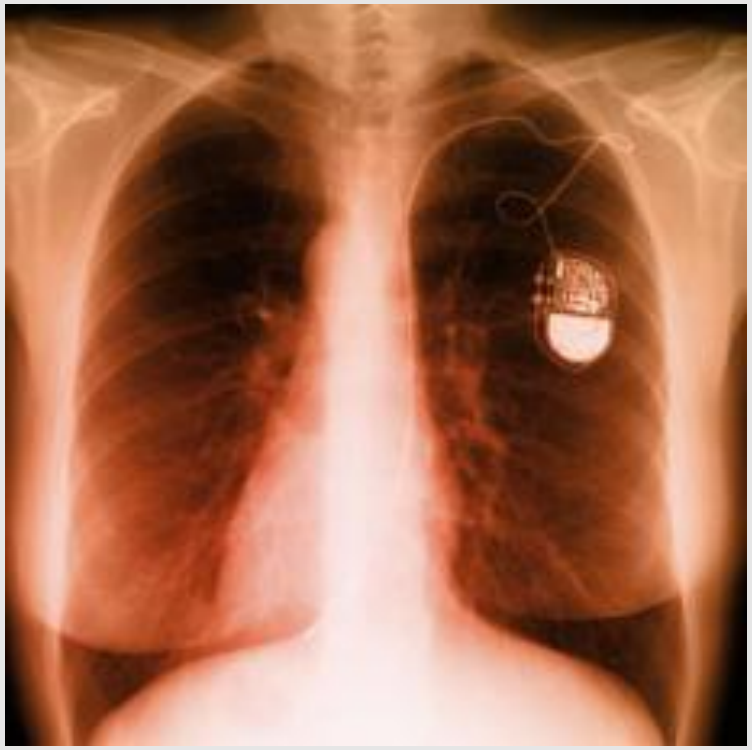

AIMDs: Main Historical Milestones (I)

- Cardiac Pacemaker: first implantable device, 1960

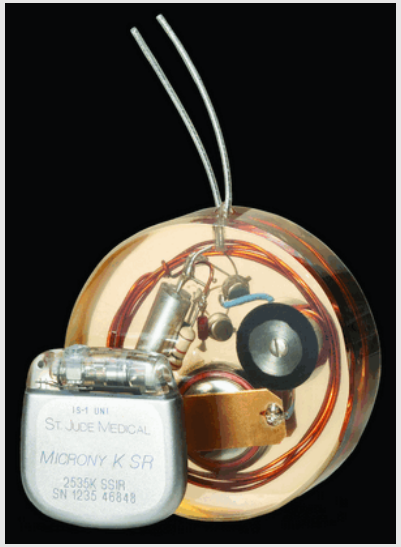

- Cochlear Implants (1960s -)

AIMDs: Main Historical Milestones (II)

- Cardiac Defibrillators (1980)

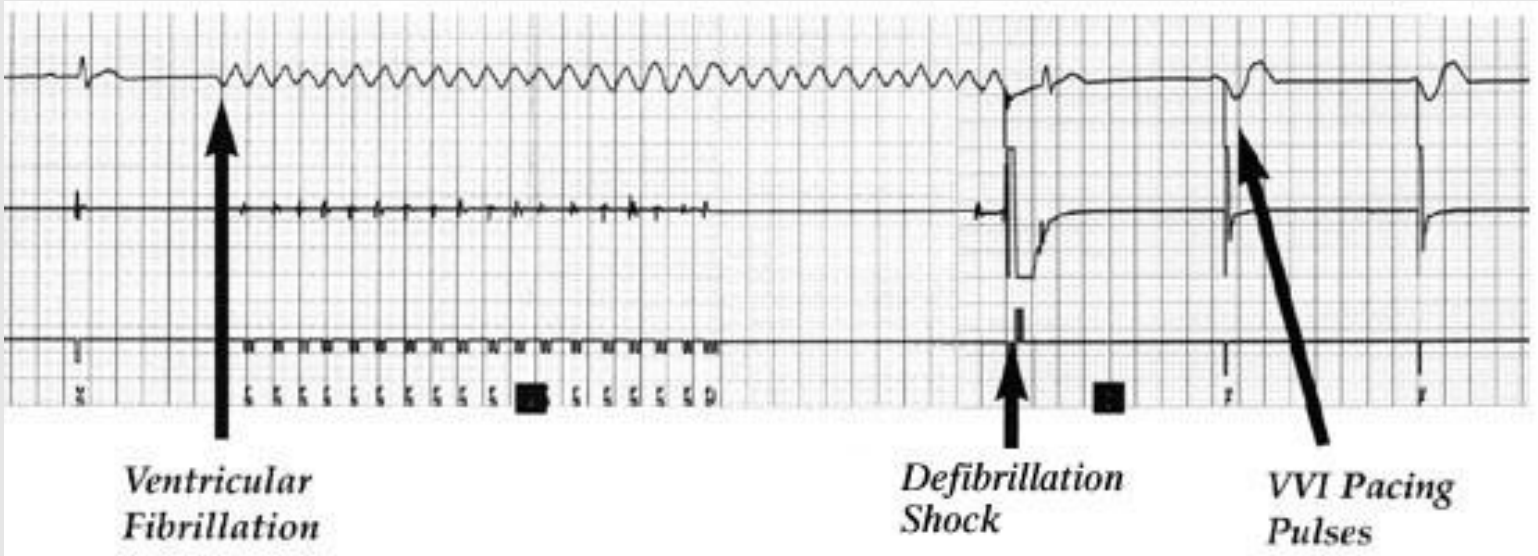

- Deep Brain Stimulator for Parkinson (1995)

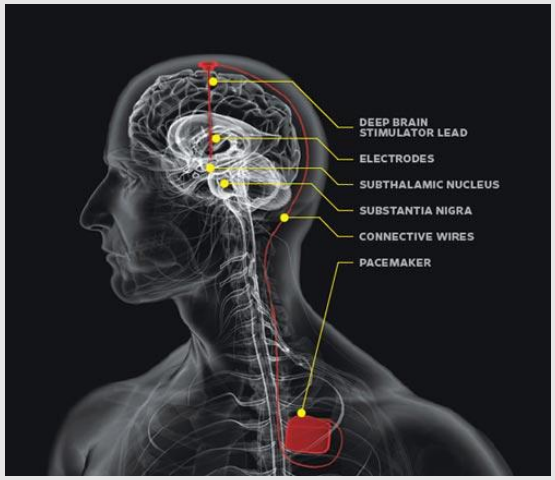

AIMDs: Some of the new developments

- Heart Failure
- Obesity
- Diabetes
- Neurostimulators:
  - Pain control
  - Blood pressure control
  - Foot drop correction
  - Urinary incontinence
  - Sleep Apnea
  - …
- Patient monitoring
- Brain – computer interface

Some system examples

- Pacemaker:
  - **Goal:** Treat Bradycardia (slow heart rythm) and conduction disorders between atria and ventricles
  - **How:** Stimulating to contract the heart when it does not contract spontaneously (“watchdog”)
  - **Sensing of:**
    - cardiac muscle signals that indicate ventricles / atria contraction
    - other indicators of physical activity, additionally in some cases

Basic Functions

- Stimulation (Open Loop)
  - Early Pacemakers
  - Cochlear Implants
  - Deep Brain Stimulators for Parkinson
  - Neurostimulators (sometimes “Man/Woman in the loop”)
- Stimulation and Sensing (Closed Loop)
  - Cardiac area (Pacemakers, Defibrillators, Heart Failure)
  - Obesity
  - Some Neurostimulators
- Only Sensing
  - Implanted “long term Holter” (“insertable loop recorder”)
- Sensing + external actuation: Brain-computer interface

Stimulation: Voltage mode

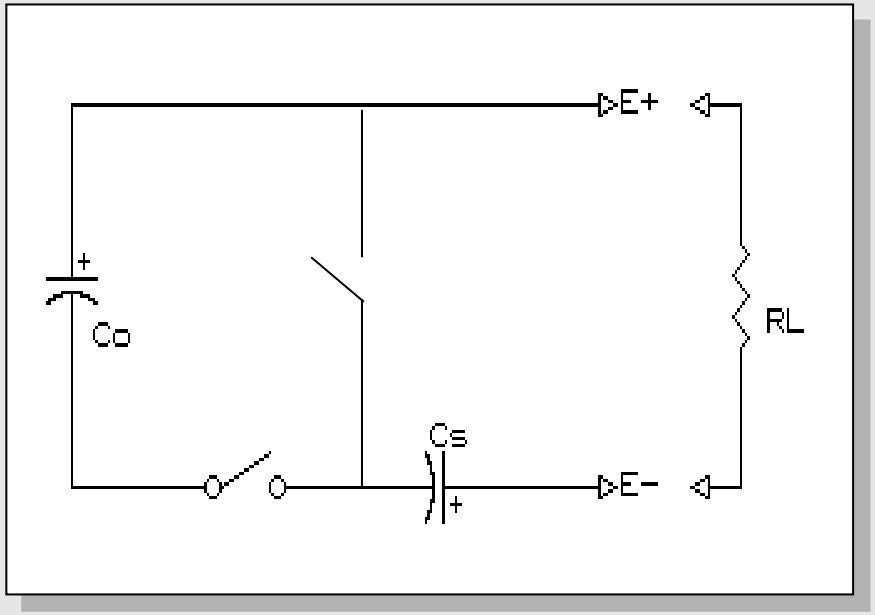

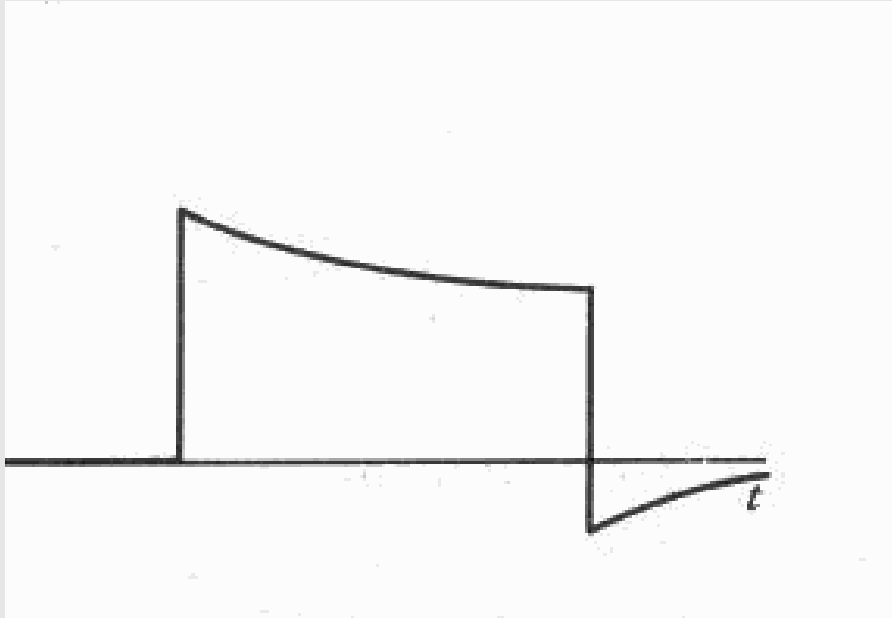

- E.g.: Pacemakers
- 0.1V … 7.5V
- 50μs … 1.5ms
- Requires battery voltage multiplier.
- RL: 500 Ohms typ.

Stimulation: Current mode

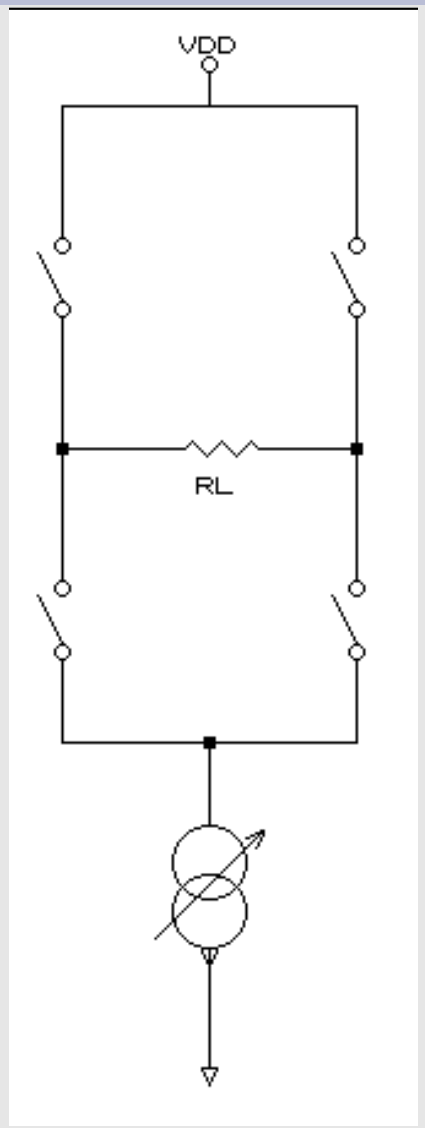

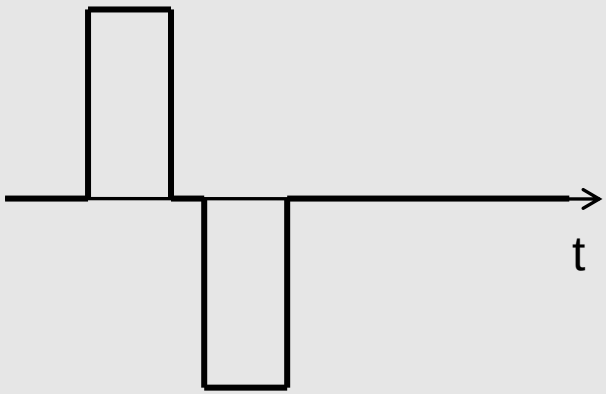

- Neurostimulators and others
- 0.1mA … 10mA
- 30μs … 300μs
- Load voltages up to 15V => Requires battery voltage multiplier

Sensing: Medical signals in general

- **Low frequency**: from < 1 Hz to a few kHz (neural signals)
- **Low amplitude**: μV to mV
- **Variability**:

" Most measured quantities vary with time, even when all controllable factors are fixed. Many medical measurements vary widely among normal patients, even when conditions are similar " (Source:J. Webster, *Medical Instrumentation. Application and Design*).

↓

Objective of most analog signal processing: <u>qualitative</u> detection for closed loop control.

↓

Traditionally advantage to **analog** implementation in terms of consumption, process scaling is changing this

Sensing

- Biopotentials:
  - mioelectric signals (mVs, 100s Hz - 1kHz)
  - cardiac signals (mVs, 10s Hz – 300Hz)
  - neural signals (μVs, up to 8kHz)
- Impedance (tens of mOhms => μVs, few Hz)
- Movement (Physical activity, position) => accelerometer (μVs (sensor dependent), up to 10Hz)

Auxiliary Functions

- Telemetry
  - Inductive (up to 10cms)
  - 403 MHz MedRadio Band (a couple of meters)
- Battery Supervision (Voltage / Impedance / Consumed Charge Measurement)
- Lead Impedance Measurement
- Magnet Sensor (Reed Relay / Hall Sensor)
- Battery Recharge (if applicable)
- Control: Microcontroller & Firmware

Non-implantable System Components

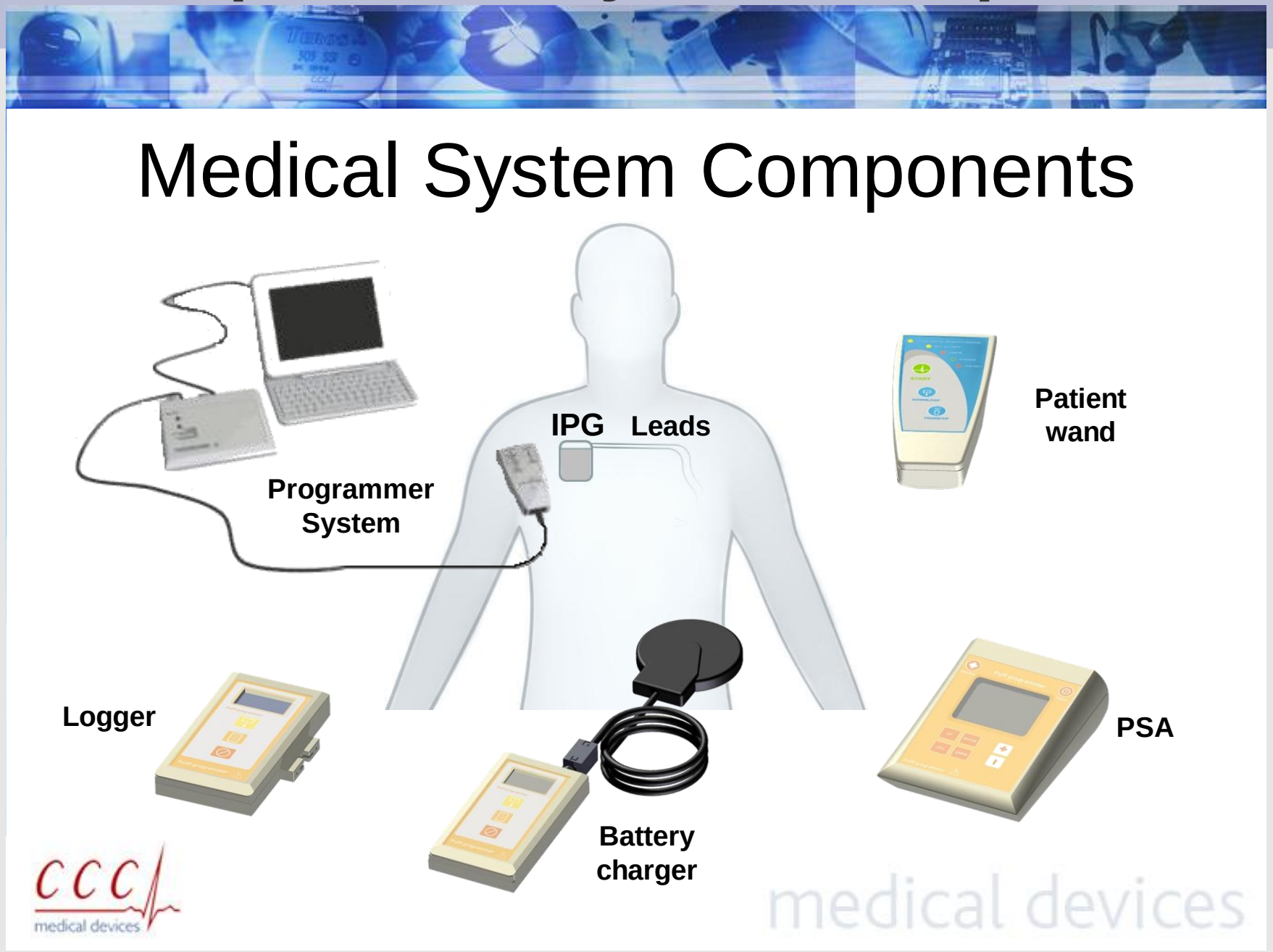

Example: Implantable Pacemakers

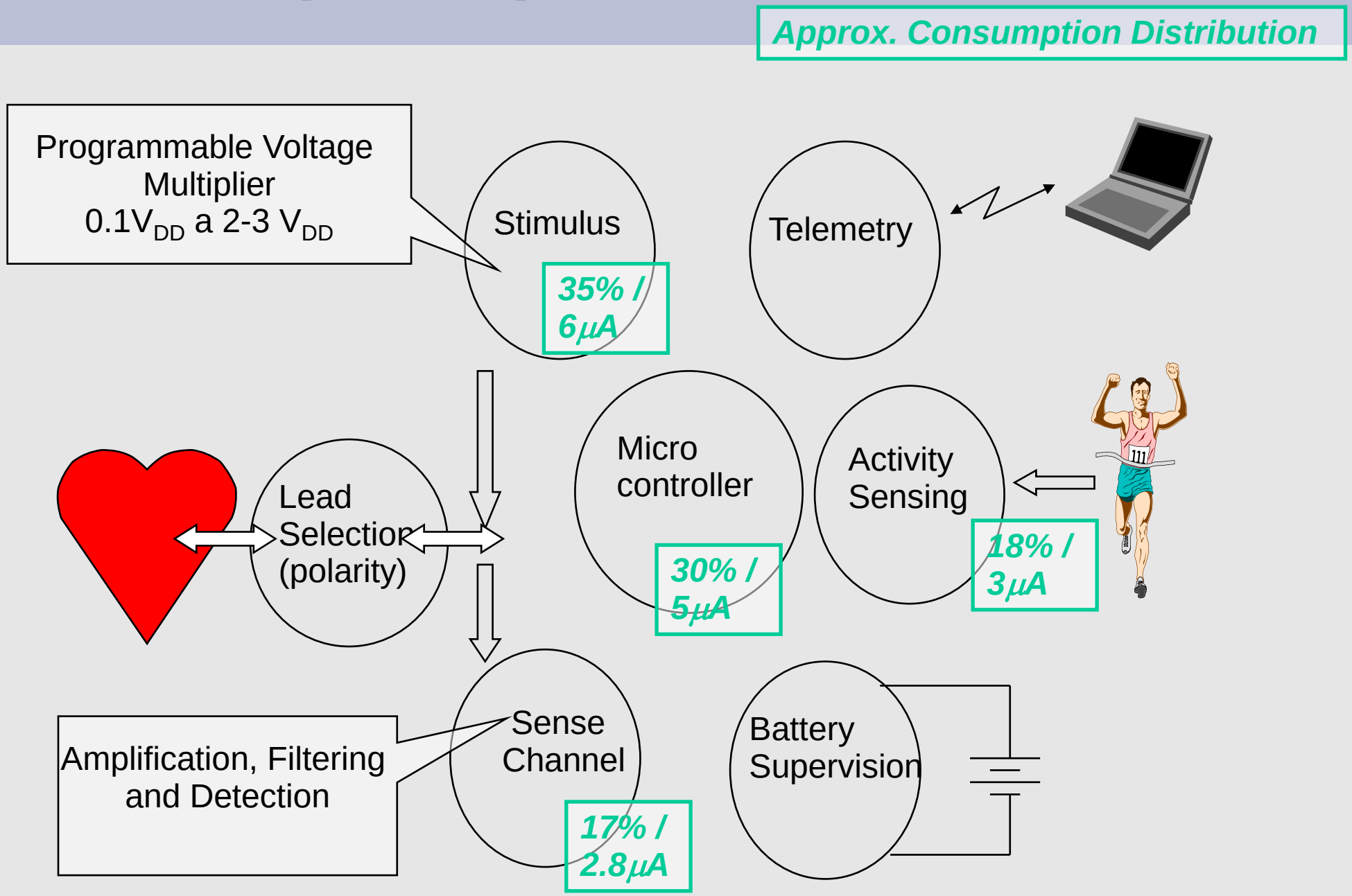

Example: Closed Loop Stimulator for Drop Foot Correction (I)

- Neurostep System (Simon Fraser Univ, Canada, Neurostream Technologies)
- Closed loop operation based on neural signal sensing and neural stimulation
- On clinical trials

Example: Closed Loop Stimulator for Drop Foot Correction (II)

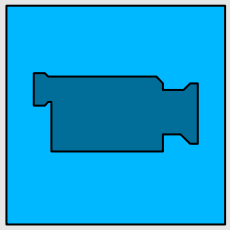

http://www.youtube.com/watch?v=xH2vNu2BbnU

General Requirements: Size

Biotronik

1968-1998

(Source: M. Wilkinson, course: MST for Medical Devices)

Currently approximately 12 cc (5cm x 4cm x 0.6cm)

→ Approx. **30 to 40%** occupied by the **battery**

Less consumption = Smaller size @ Equal Service Life

General Requirements: Batteries (I)

- Lithium-Iodine Battery (Li/I_2)
  - **THE** pacemaker battery during almost 30 years
  - Beguining of life: **2.8V**, Operation down to **2.0V**.
  - High internal impedance, specially near depletion (several kohms)
    - Must be taken into account in complete device (power decoupling) and circuit design (instantaneous consumption, PSRR)
    - Common problem with other non-implantable batteries (e.g LiMn02)
- Capacity: In the order of **1 Ah = 114 μA . Year**

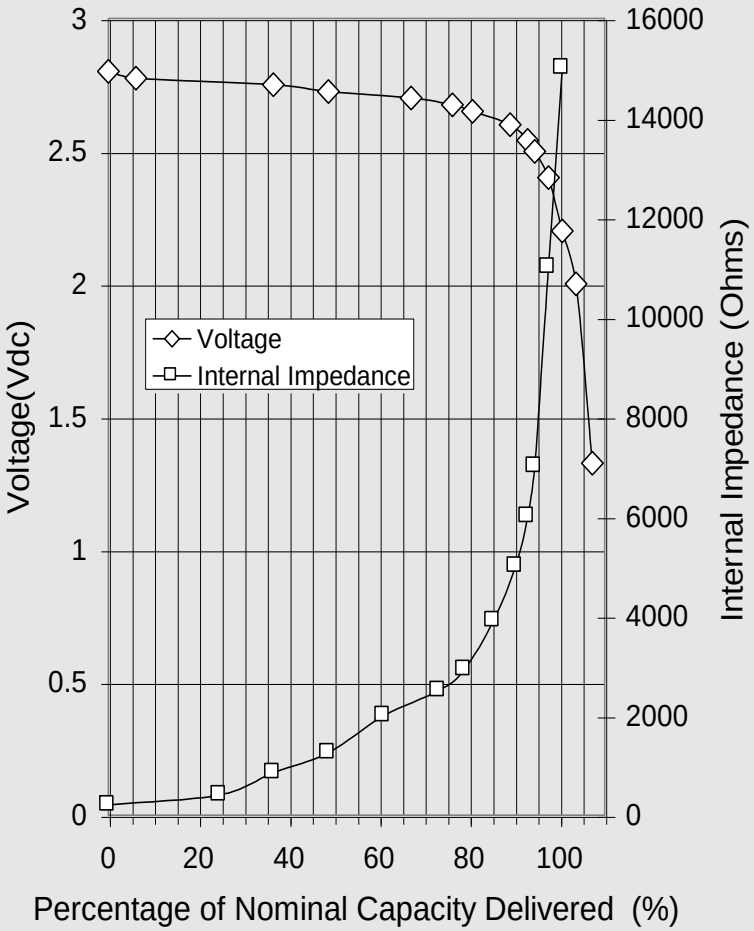

General Requirements: Batteries (II)

- For higher <u>instantaneous</u> consumption devices, lower impedance required
  - Lithium-Silver-Vanadium-Oxide (Li/SVO)
  - Lithium-Carbon-Monofluoride (Li/CFx)
  - QMR / QHR: Li + combined SVO / CFx
    - Being applied also in pacemakers recently.
- For higher <u>average</u> consumption devices:

  <u>Rechargeable lithium batteries</u> (since approx. year 2000, capacity in the order of **0.3Ah**)

  <u>Direct powering from RF energy transmitted transcutaneously</u>

General Requirements: Battery and Consumption

- Capacity: In the order of **1 Ah = 114 μA . Year**
- Consumption

  Service Life: **6 to 12 years** => consumption: **19 μA** to **9 μA**

  Average consumption due to stimulation (pacemakers): **3 μA** to **12 μA=> Unavoidable**

  State of the art: average consumption **internal to the circuit** around **5 to 10μA**

  Consumption internal to the circuit: **50%** to **75%** of total consumption

  ➡ <u>There is room and need for improvement</u>

General Requirements: Safety and Reliability

This is not acceptable !!!

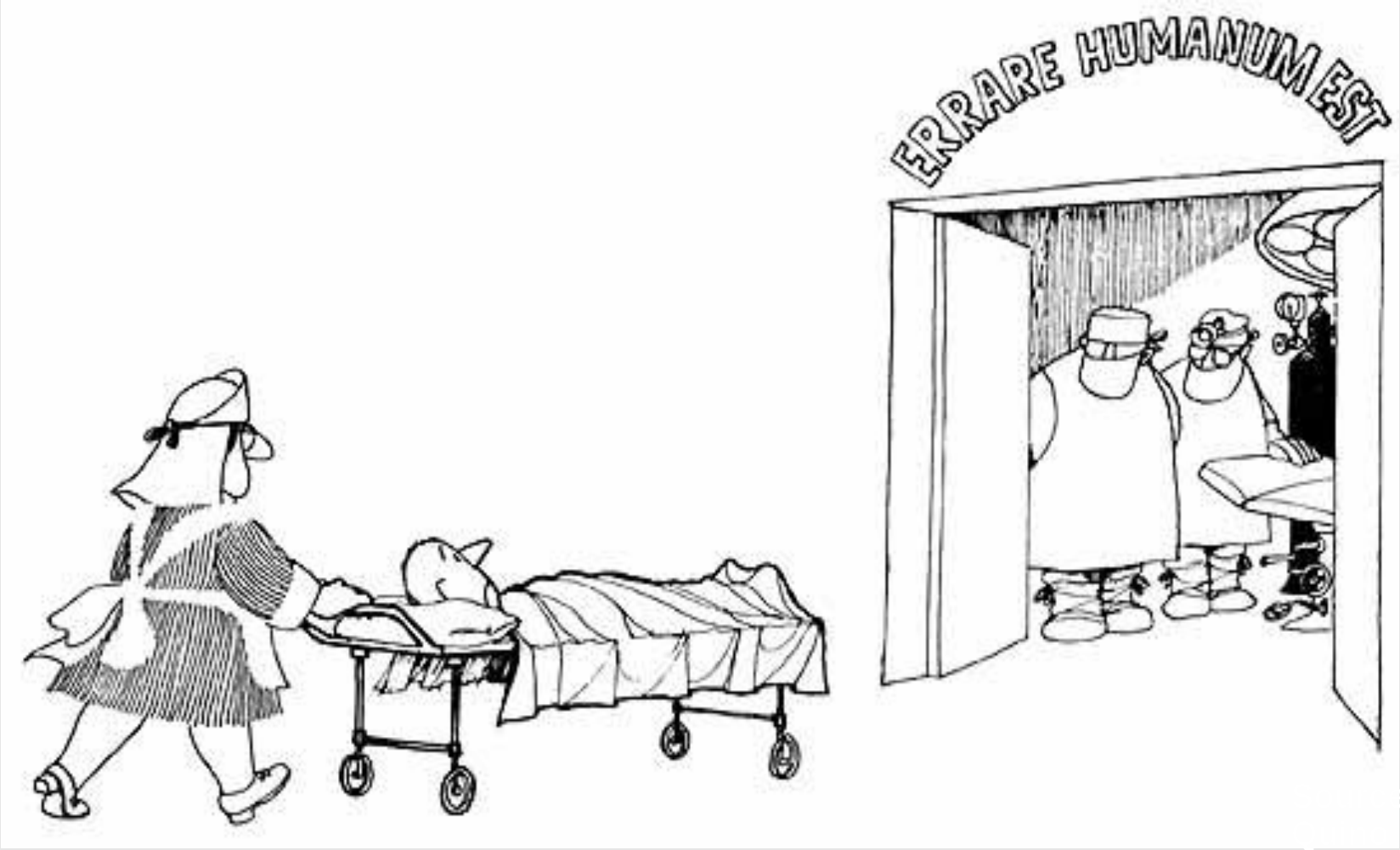

General Requirements: Safety and Reliability

Reliability => Frequency and probability of faults

Safety: Involves many aspects, particularly:

=> A <u>single fault</u> must not provoke a catastrophic event

High Reliability => Probability of single fault is low and double fault is virtually impossible

+

Safety

=> Probability of malfunctioning is low

=> Catastrophic Failure: virtually impossible

General Requirements: Safety and Reliability

Involves all the stages:

- System and Circuit Design
- System and Circuit Verification, Qualification and Medical Validation
- Medical Device Application, Configuration and Use

Strongly conditions design: E.g. Limiting DC leakage towards the heart under single fault conditions => external capacitors

Importance of paying attention from the very beginning to applicable standards on AIMD safety, risk analysis and applicable regulations.

Outline

I. System: Active Implantable Medical Devices Today

II. Transistors and Circuits: Analog Design for ULP.

- Transistor Modeling.
- Design Methodology.

III. Circuit Techniques: Implementation of AIMDs blocks

IV. Conclusions and Prospects

Introduction

- Bipolar (BJT) Analog Design:

  $$gm = Ic/UT$$

  – Basically 1 degree of freedom: Ic

- MOS Analog Design:

  $$gm = f(ID, W, L)$$

  – 3 degrees of freedom
  – Traditionally: only part of the design space: the strong inversion (above threshold) region

MOST Inversion Regimes (1)

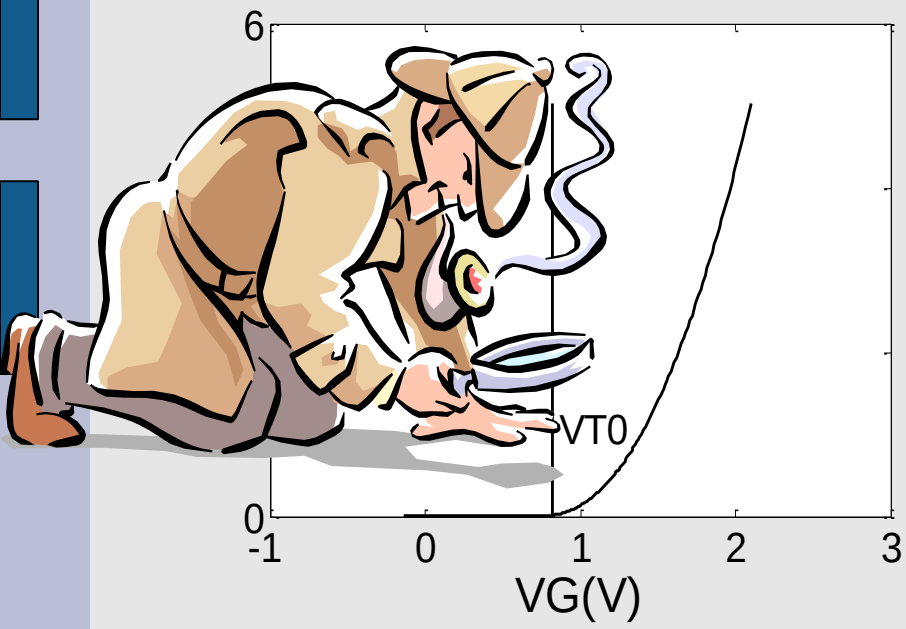

Strong Inversion (S.I.)

$I_D \propto (V_G - V_T)^2$

Moderate inversion

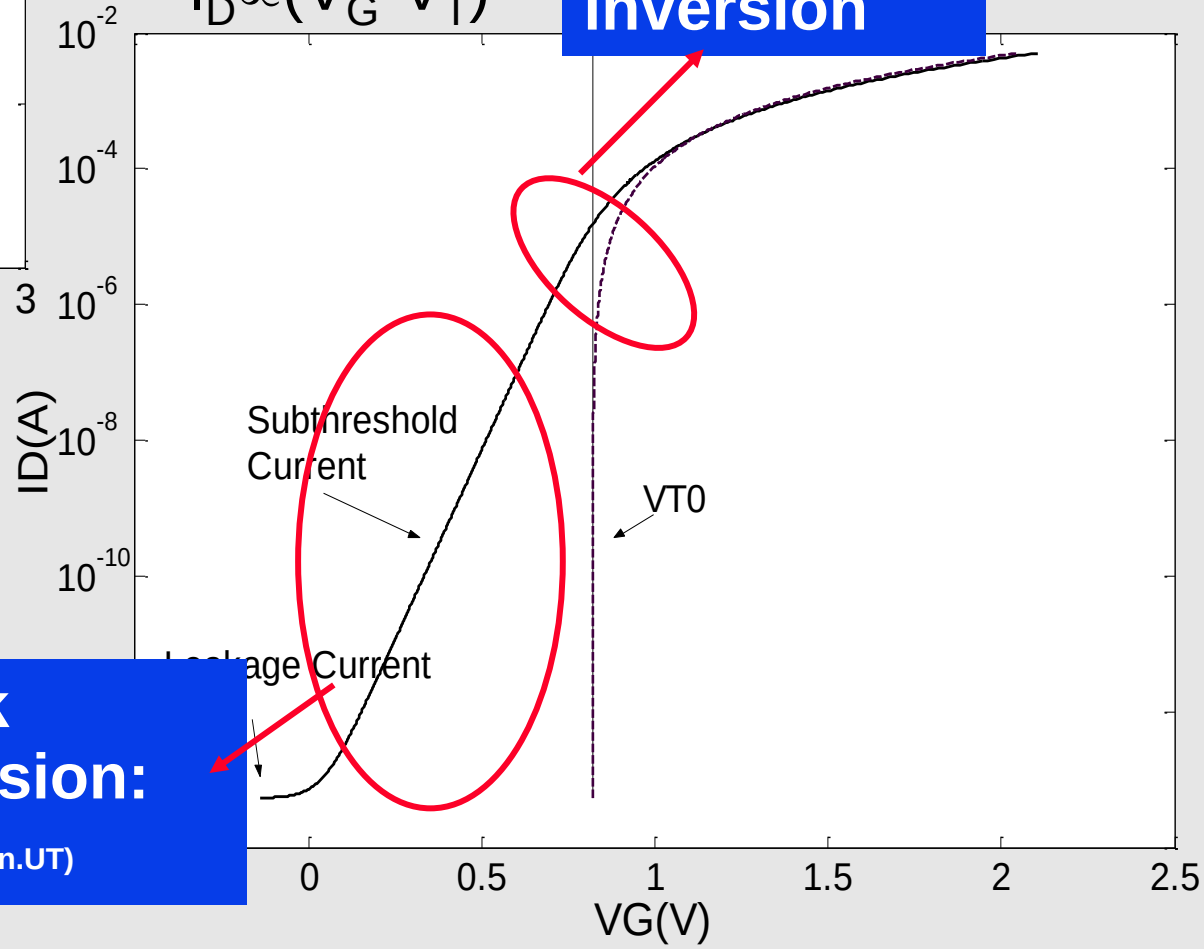

Weak inversion:

$I_D \propto e^{VG/(n.UT)}$

MOST Inversion Regimes (2)

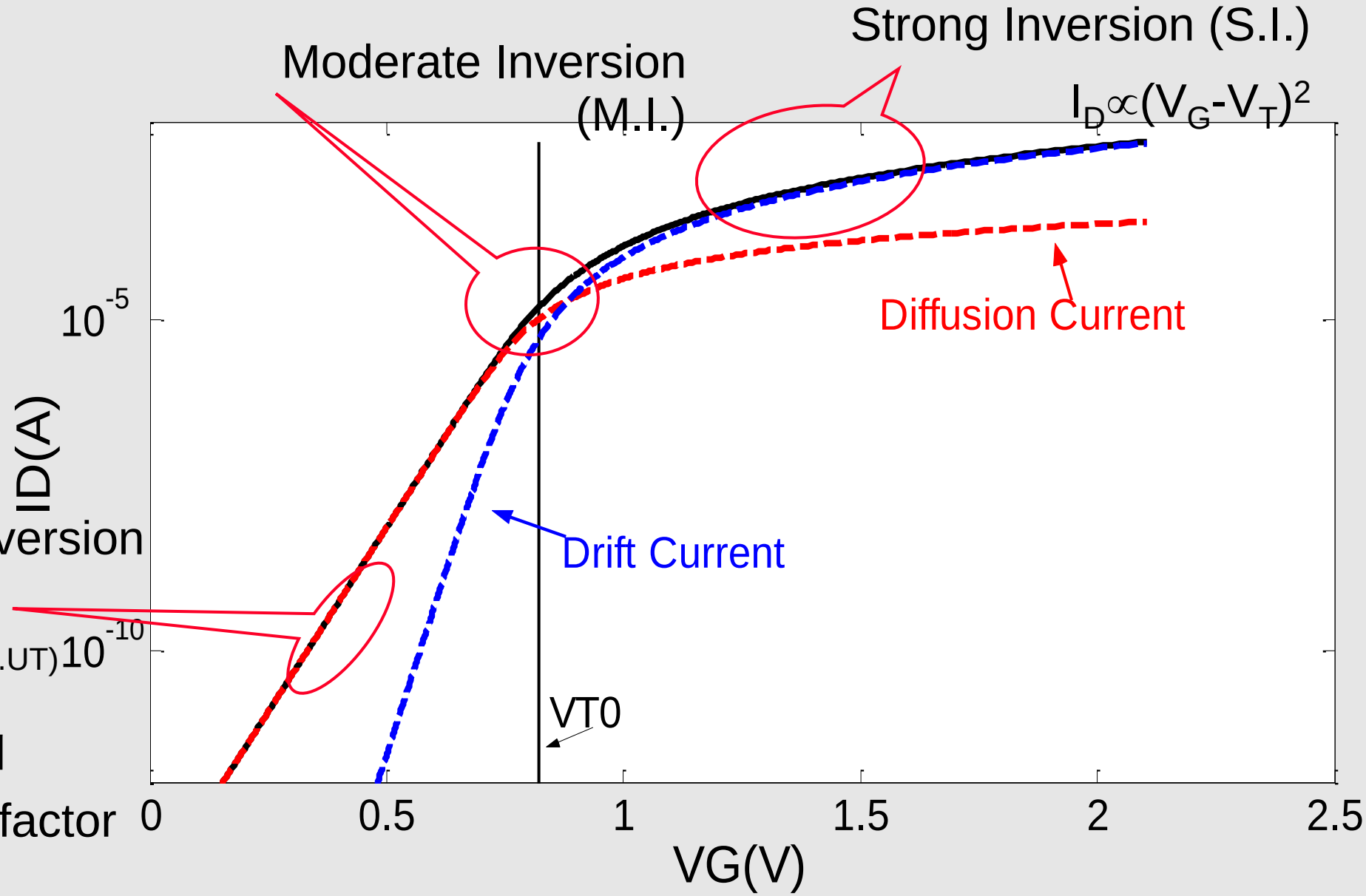

Weak Inversion (W.I.)

$I_D \propto e^{VG/(n.UT)}$

$U_T = k.T/q$

n: slope factor

All regions, continuous MOST models

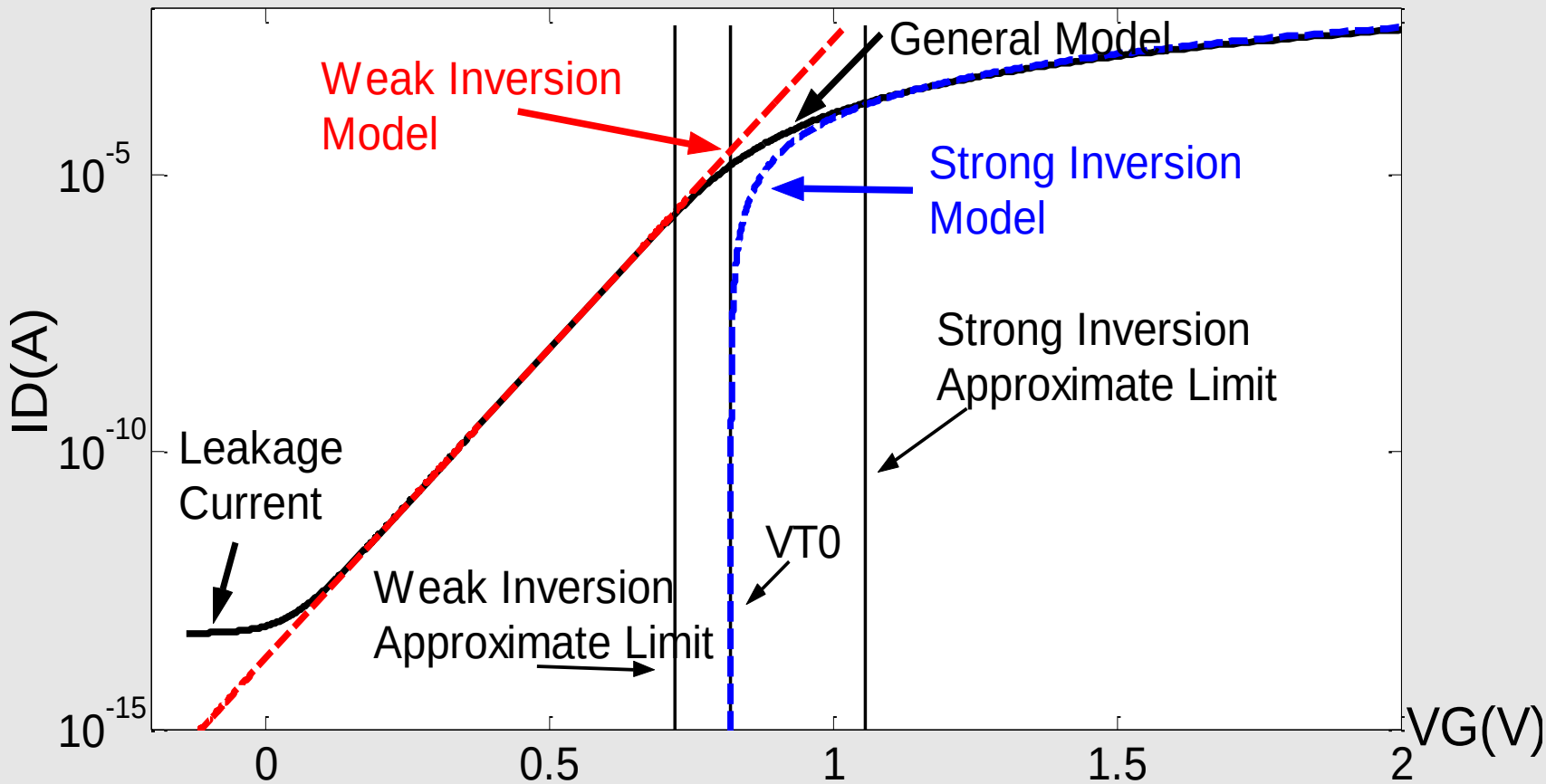

- EKV (Enz, Krummenacher, Vittoz, EPFL, AICSP 1995): originally mathematic interpolation between strong and weak inversion equations, now physical
- ACM (Advanced Compact Model, A. Cunha, C. Galup-Montoro, M. Schneider, UFSC, IEEE JSSC 1998): Physical model.
- … or **experimental / simulation curves**

“Intrinsic” MOS Amplifier

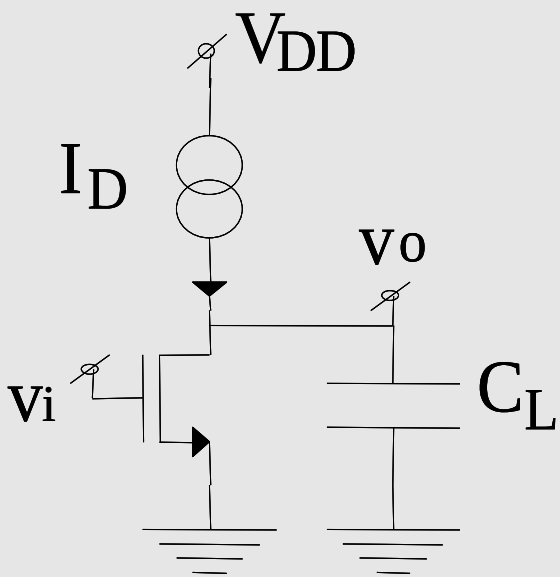

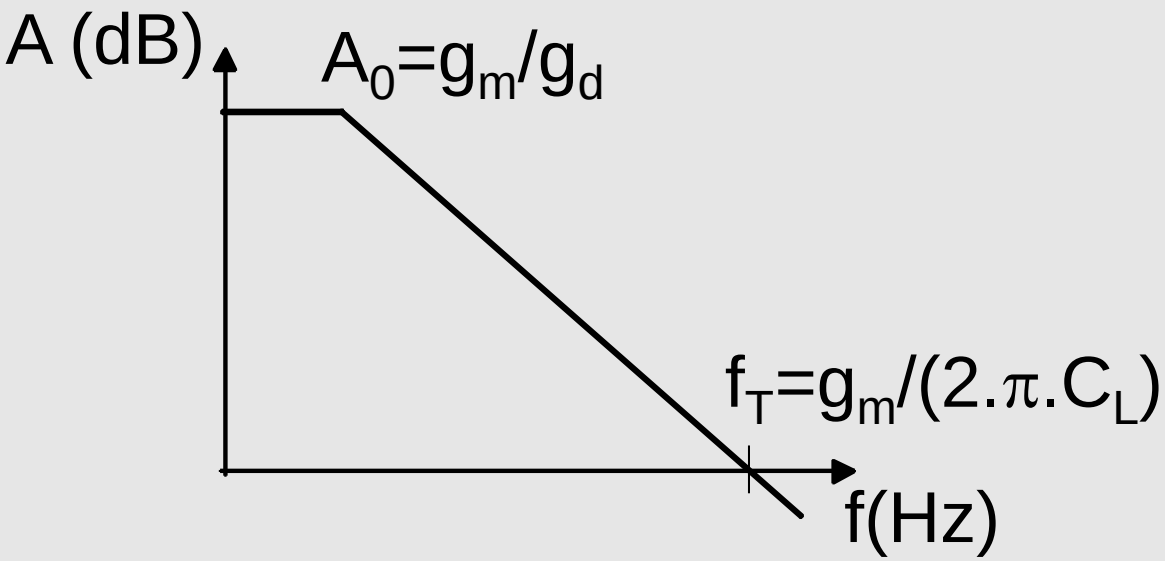

OTA: Operational Transconductance Amplifier

$$A_0 = g_m.r_o = \frac{g_m}{g_d} = \frac{g_m}{I_D}.V_A = \frac{g_m}{I_D} \Big/ \frac{g_d}{I_D}$$

$$f_T = \frac{g_m}{2\pi C_L}, \quad A = \frac{A_0}{1 + \frac{s.A_0}{2\pi f_T}}$$

- Consumption: I_D
- Speed g_m/C_L
- C_L: total: external + parasitics
- Speed - Consumption trade-off : g_m/I_D

g_m/I_D vs. V_G

$$\frac{g_m}{I_D} = \frac{1}{I_D}\partial I_D/\partial V_G = \frac{\partial \log(I_D)}{\partial V_G}$$

- g_m/I_D is the slope of I_D vs. V_G in log scale

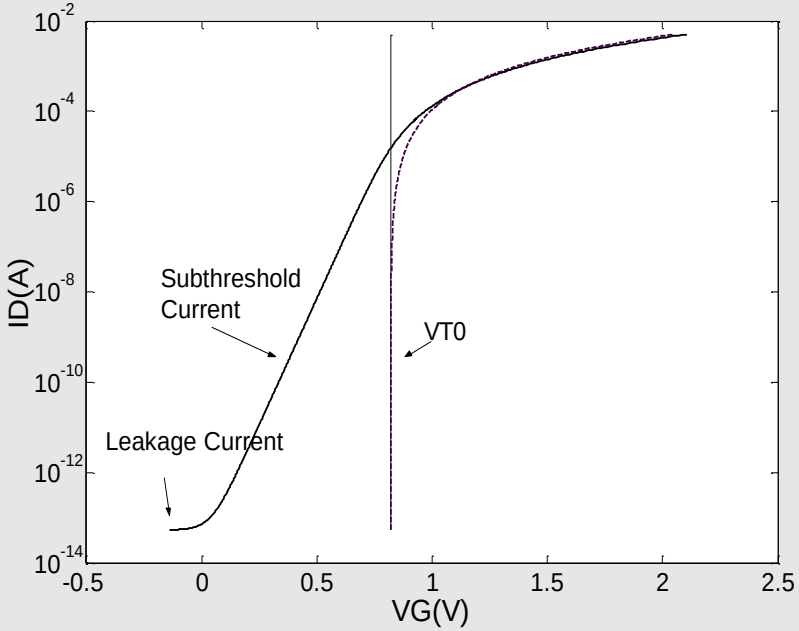

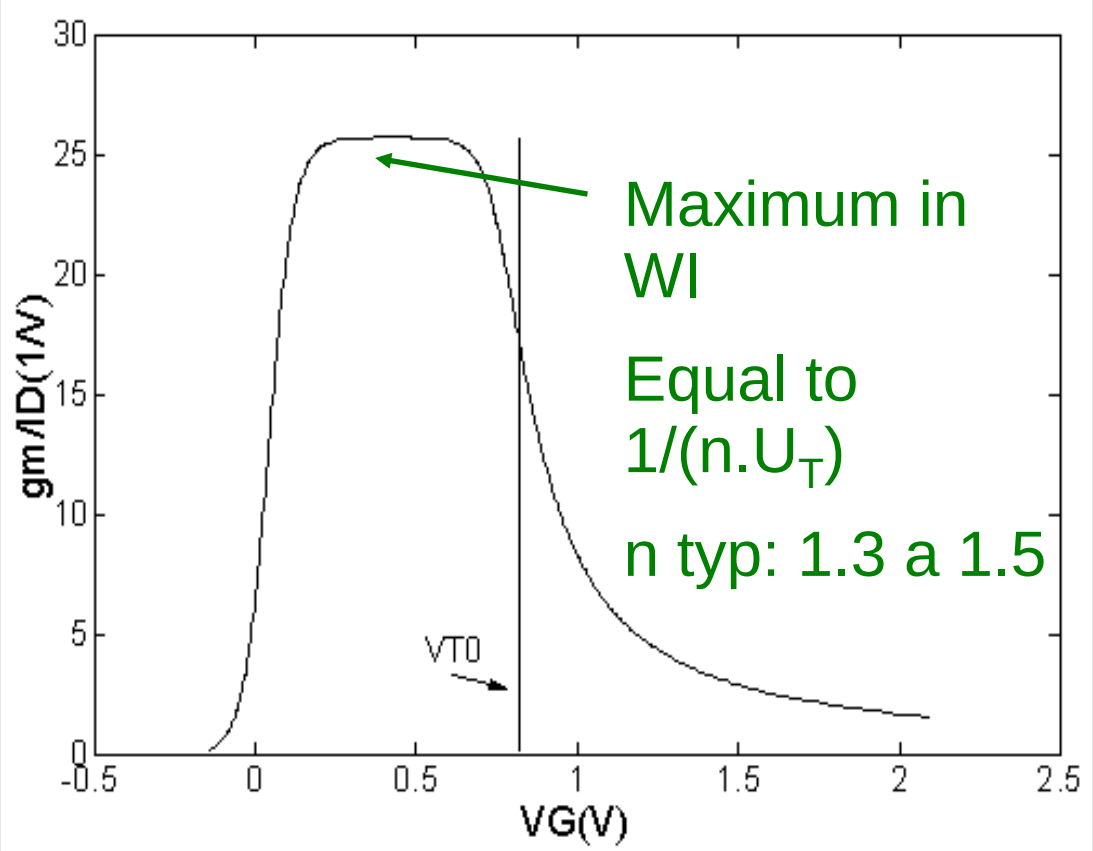

g_m/I_D vs. I_D

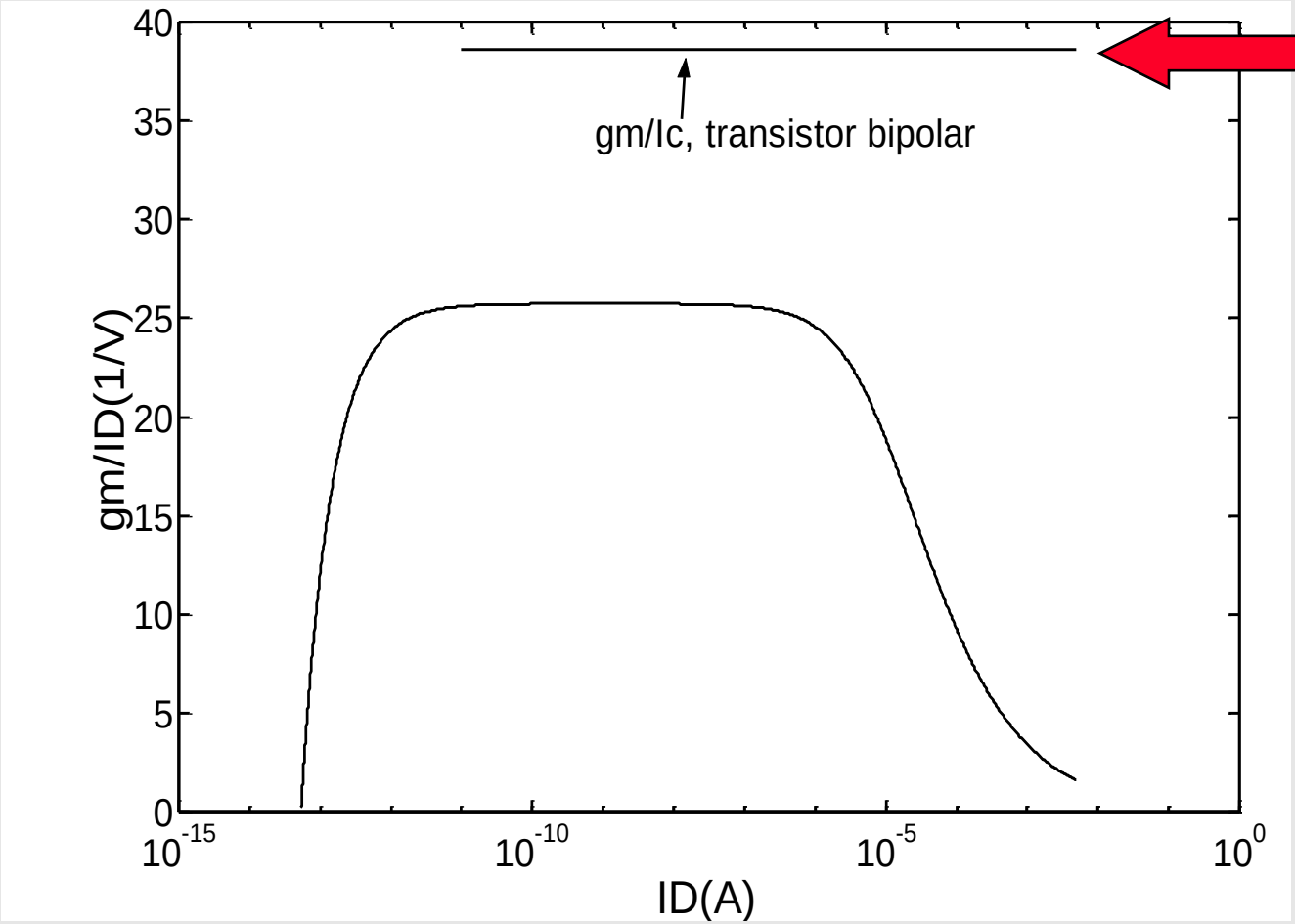

Bipolar Transistor:

g_m/I_C independent of current in a wide range

W/L =100 and 0.8μm technology.

- As the current increases, the "g_m generation efficiency decreases"
- To reach the maximum frequency allowed by the technology:

=> high g_m => high current => strong inversion => low efficiency

g_m/I_D and transistor size

When short channel effects <u>are not</u> significant:

$I_D=\mu C_{ox}(W/L).f(V_G, V_S, V_D)$ ➡ $\left(\frac{g_m}{I_D}\right)=f\left(I_{norm}\right)$ $\quad I_{norm}=\frac{I_D}{(W/L)}$

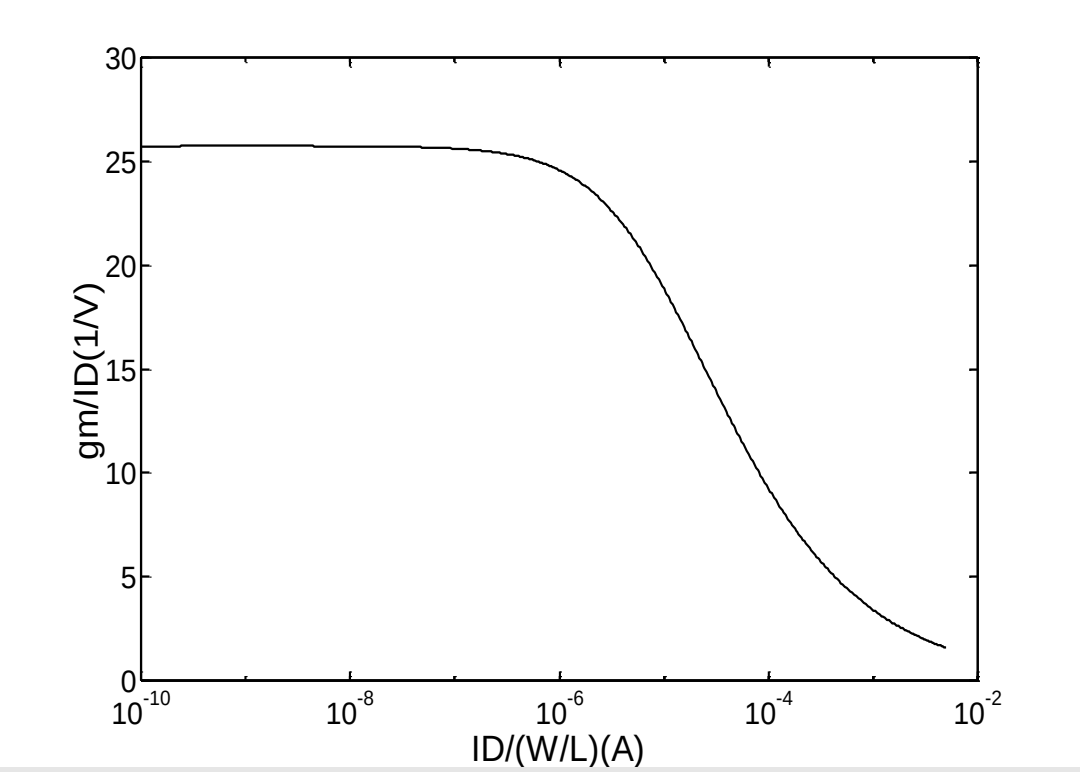

$$I_{norm}=\frac{I_D}{\mu C_{ox}(W/L)}$$

$$I_{norm}=i_f=\frac{I_D}{I_S}$$

When short channel effects <u>are</u> significant: $\left(\frac{g_m}{I_D}\right)=f\left(I_{norm},L\right)$

Design Methodology: g_m/I_D key variable

[Silveira, Flandre, Jespers, IEEE JSSC 1996, P.Jespers, Springer, 2010]

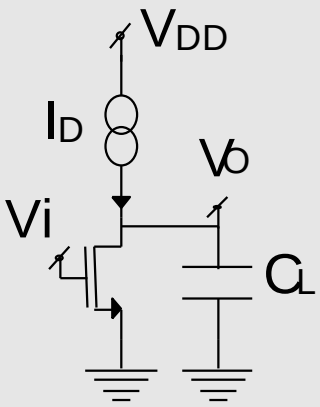

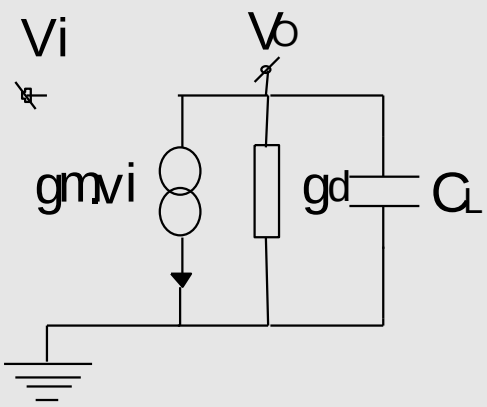

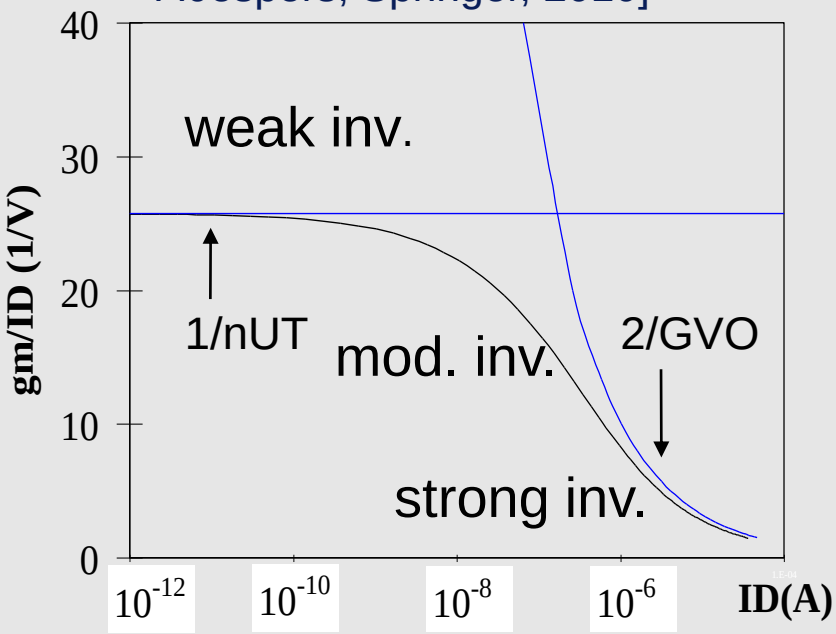

$$A_0 = \frac{g_m}{I_D} V_A \qquad f_T = \frac{1}{2\pi}\frac{g_m}{C_L} = \frac{1}{2\pi C_L}\frac{g_m}{I_D} I_D$$

Circuit Performance

g_m / I_D

Transistor Operating Mode

Transistor Sizing

$$I_D = \mu C_{ox}(W/L).f(V_G, V_S, V_D)$$

$$\left(\frac{g_m}{I_D}\right) = f\left(I_{norm}\right) \qquad I_{norm} = \frac{I_D}{(W/L)}$$

$$I_{norm} = \frac{I_D}{\mu C_{ox}(W/L)}$$

Optimum of Power Consumption

Weak inversion: $I_D \propto e^{VG/(n.UT)}$

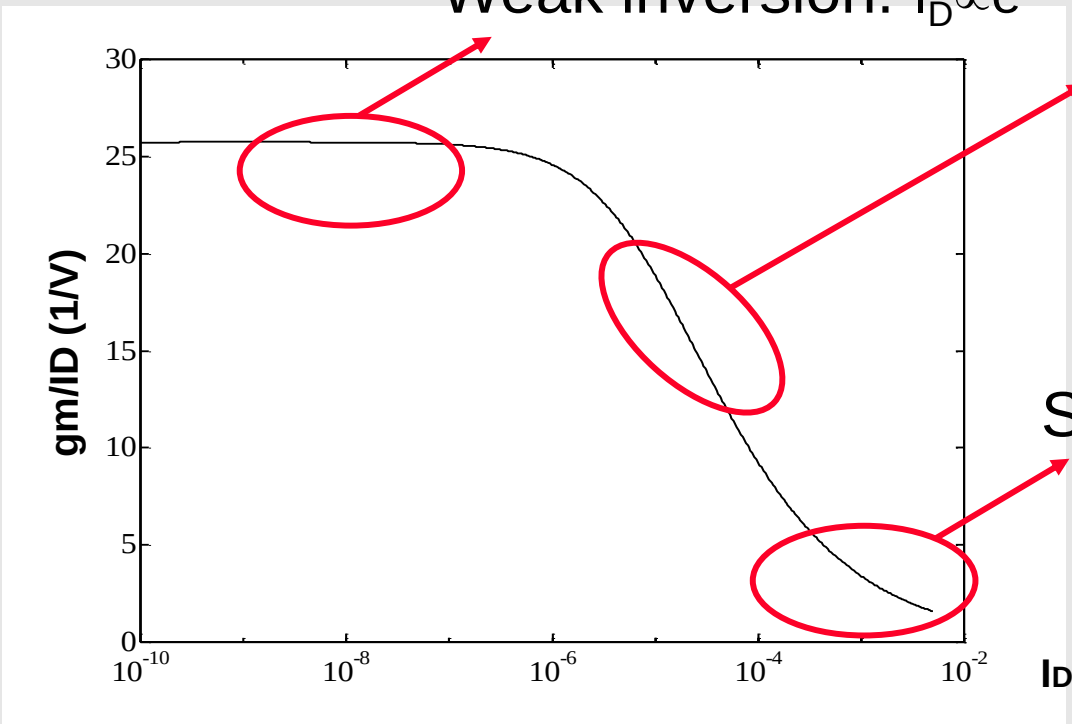

Moderate inversion

Strong inversion ($I_D \propto (V_G - V_T)^2$)

- Working towards WI

$g_m/I_D \nearrow \rightarrow I_D \searrow$

$W/L \nearrow \rightarrow C \nearrow \rightarrow g_m \nearrow$

Usually an optimum exists in moderate inversion

Example
Intrinsic Amplifier: Power Optimum

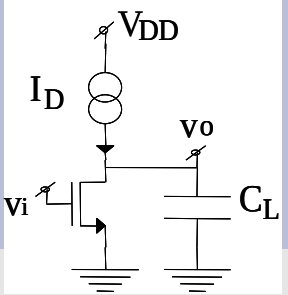

f_T=10MHz, C_L=3pF, L=2μm, tech: 0.8μm

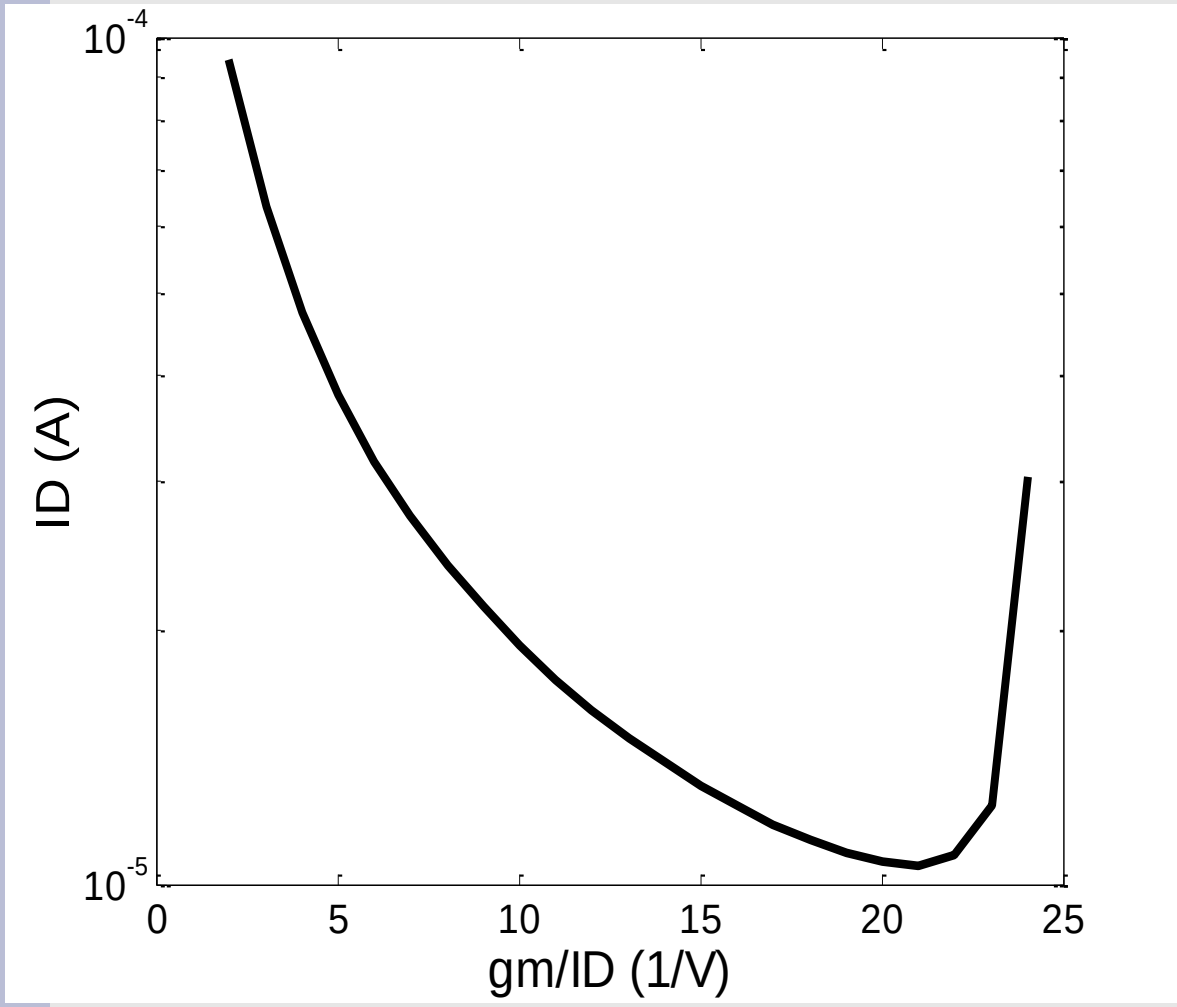

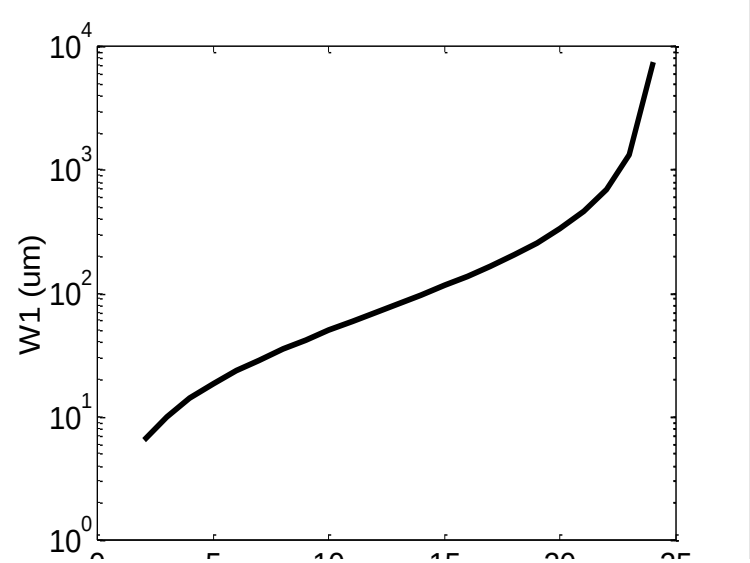

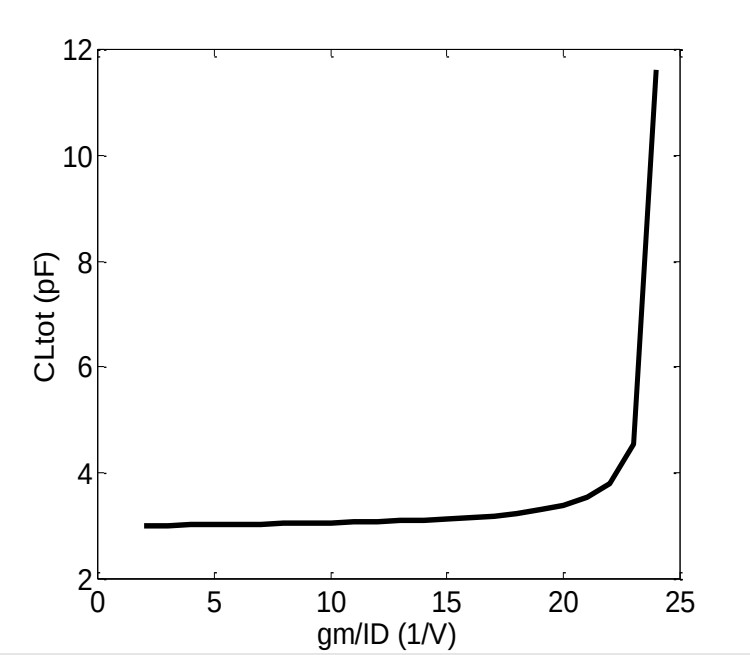

Example

Intrinsic ar m, C_L 3pF

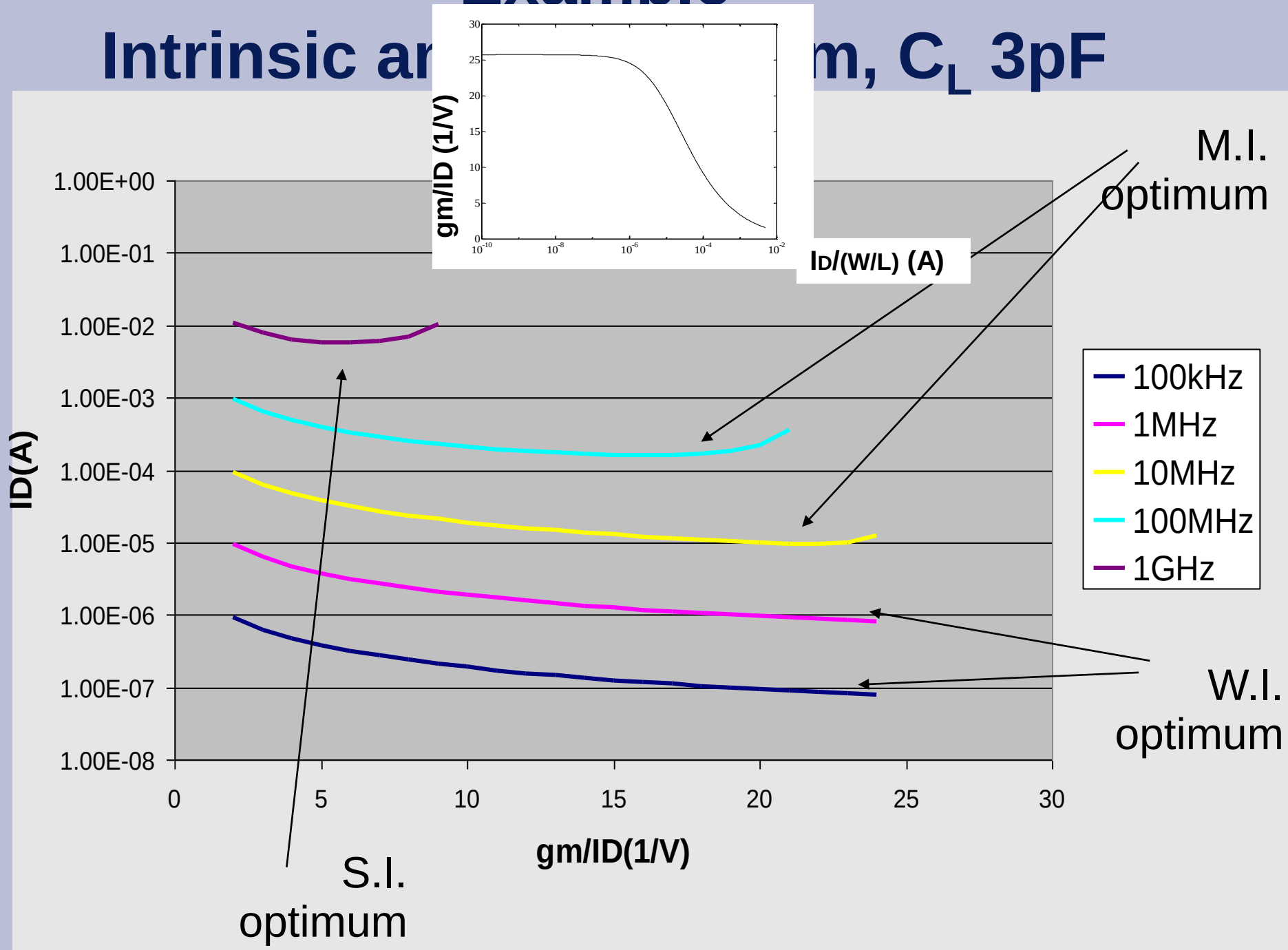

gm/ID in the nanometer and post CMOS era

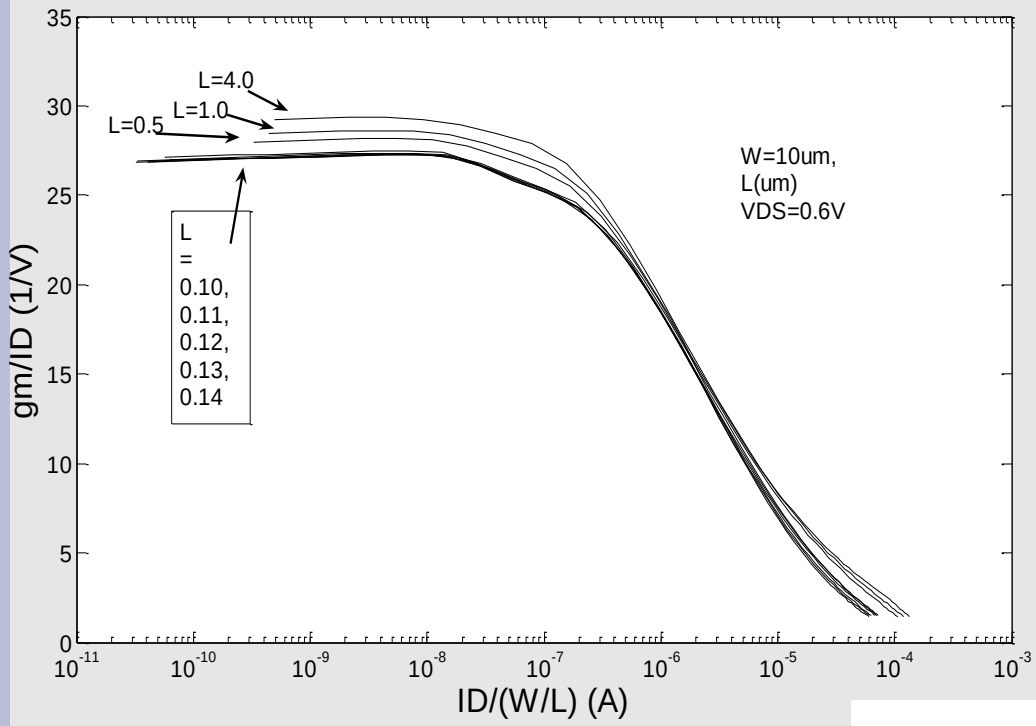

B. Sensale-Rodriguez et al, accepted for presentation at IEEE SubVt 2012, joint work with U. Notre Dame, Indiana.

Derived based on data from P. Jespers, The g_m/I_D Methodology a sizing tool for low-voltage analog CMOS circuits, Springer, 2010, extras.springer.com

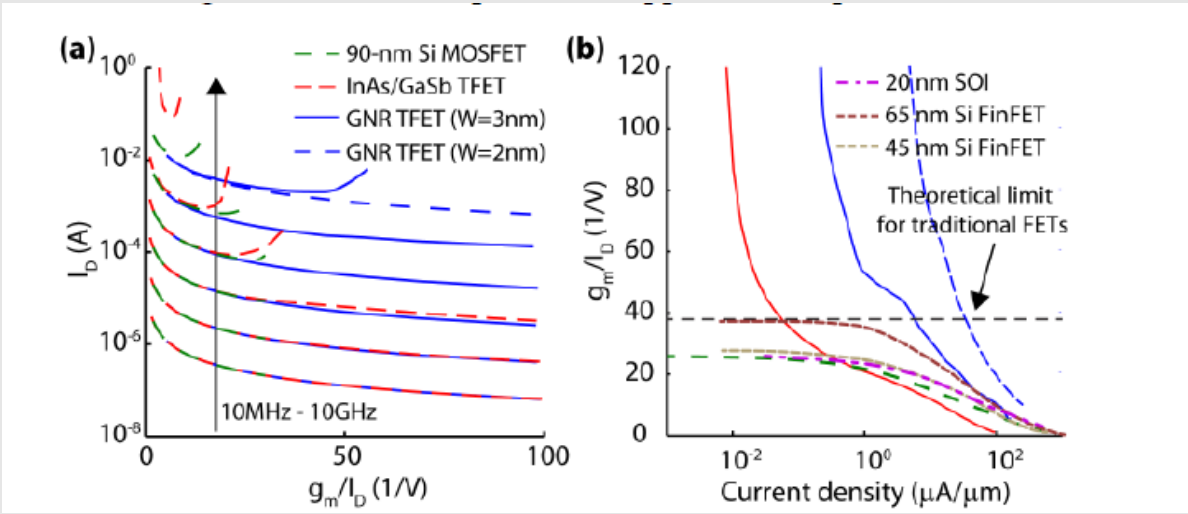

Outline

I. System: Active Implantable Medical Devices Today

II. Transistors and Circuits: Analog Design for ULP.

- Transistor Modeling.
- Design Methodology.

III. Circuit Techniques: Implementation of AIMDs blocks

IV. Conclusions and Prospects

ULP Analog Signal Processing: 1) RC Active Filter

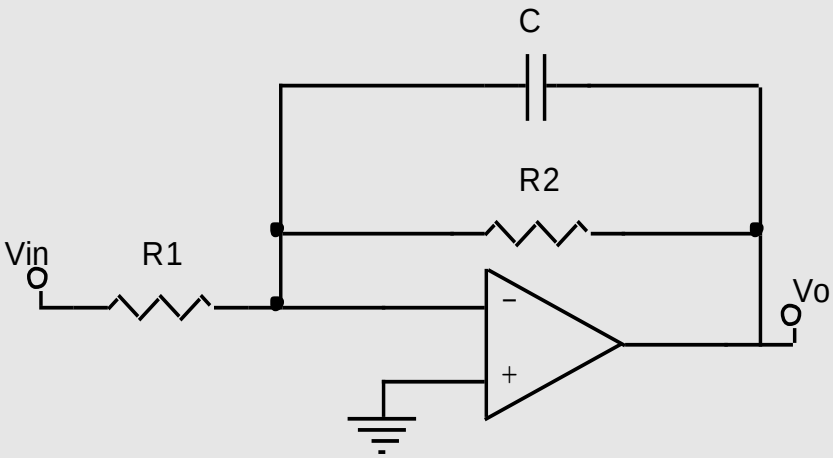

Low pass filter

$$\frac{v_o}{v_{in}} = \frac{R_2 / R_1}{(1 + R_2.C.s)}$$

- Limited by values possible to integrate: up to kΩ o M Ω (special process) and 100s pF
- Large spread in absolute values of integrated components
- => Drawback: need for external components ..., but ....

ULP Analog Signal Processing: External components should always be avoided ?

- A few are required to **avoid single fault risks**.
- Full integration might be paid in terms of consumption in order to accomodate less precise components

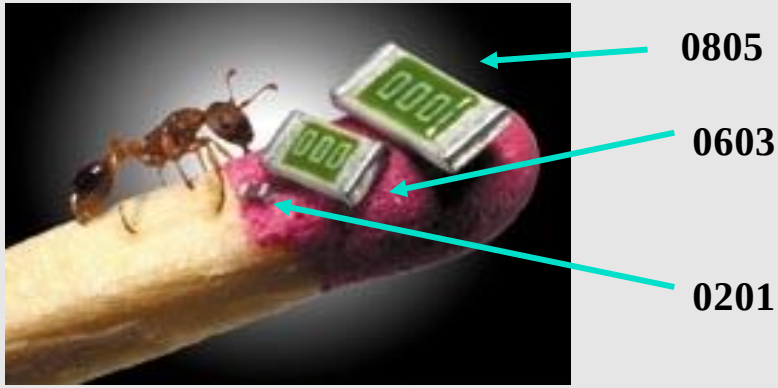

- 0402 SMT components up to 10MΩ and 15μF
- 0402 SMT => 1mm x 0.5mm x 0.35mm = 0.18mm^3
- Considering PCB, IC package pin, routing => 2 - 5 mm^3
- **Size and Consumption** are linked through **Battery size**

1 Ah = 114 μA.year
10 year service life

→ 11.4μA
5cc battery

→ 44mm^3/ 100nA

ULP Analog Signal Processing: 2) Switched capacitor filters

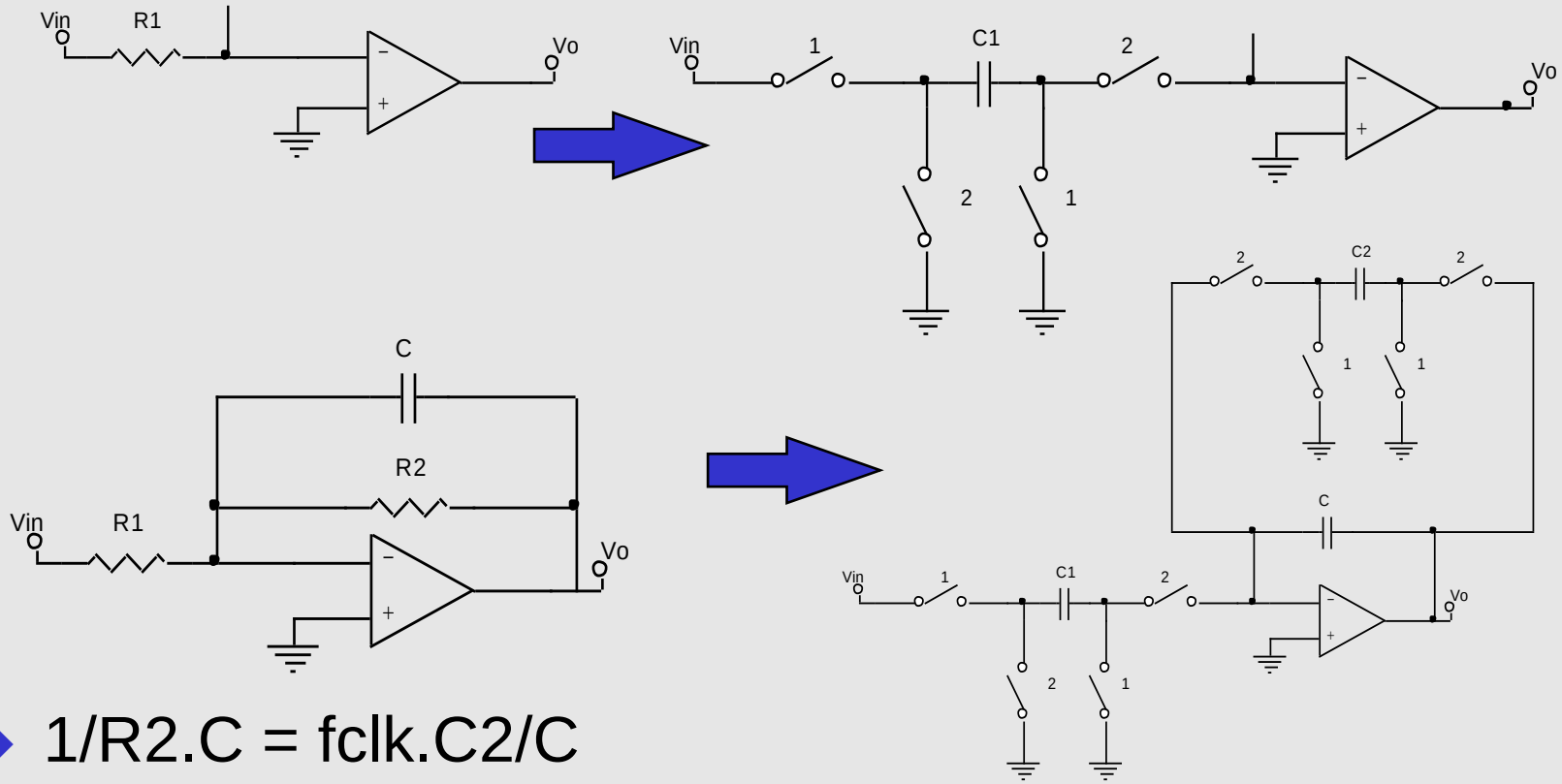

- 1/R2.C = fclk.C2/C
- **+** precise, **+** large time constants possible, **+** fully integrated
- **-** op amps consumption, **-** antialiasing

ULP Analog Signal Processing: 3) Gm-C Filters

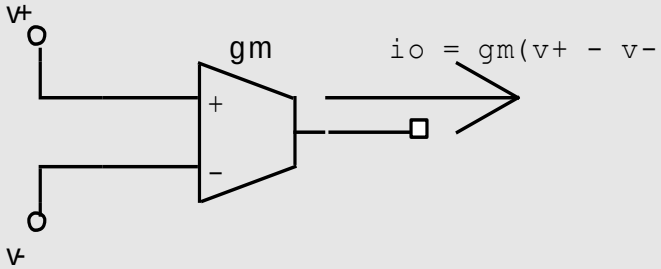

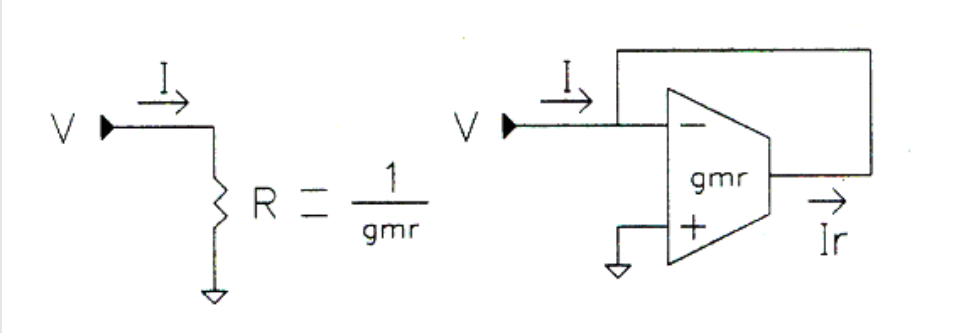

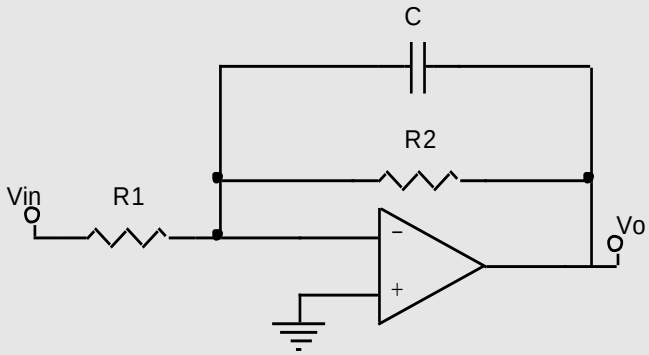

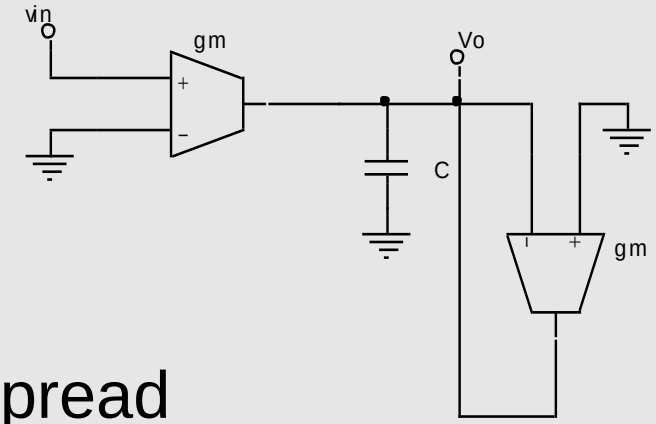

- $R=1/g_m$ => $1/R2.C = g_{m2}/C$ => spread
  => **on-chip automatic tuning**
- **+** large time constants possible
- **-** input linear range requirements for transconductors

Example of modules: Pacemaker Activity Sense

Objective:

- E.g. Activity indicator: 3s Average of the absolute value of acceleration in the 0.5 - 7 Hz band.

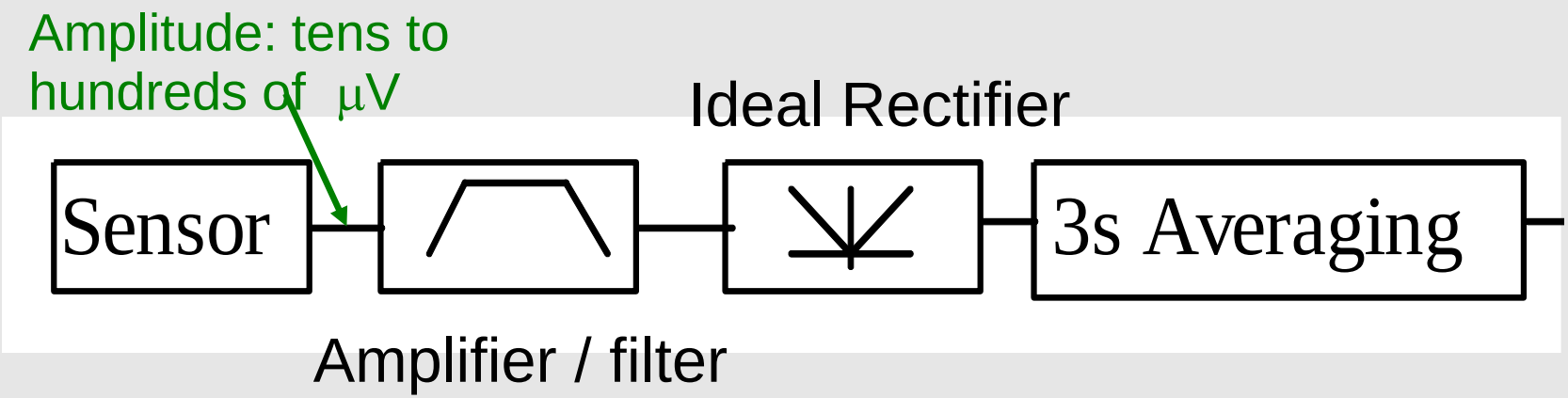

Accelerometer Signal Conditioning (1): Amplifier / Bandpass filter

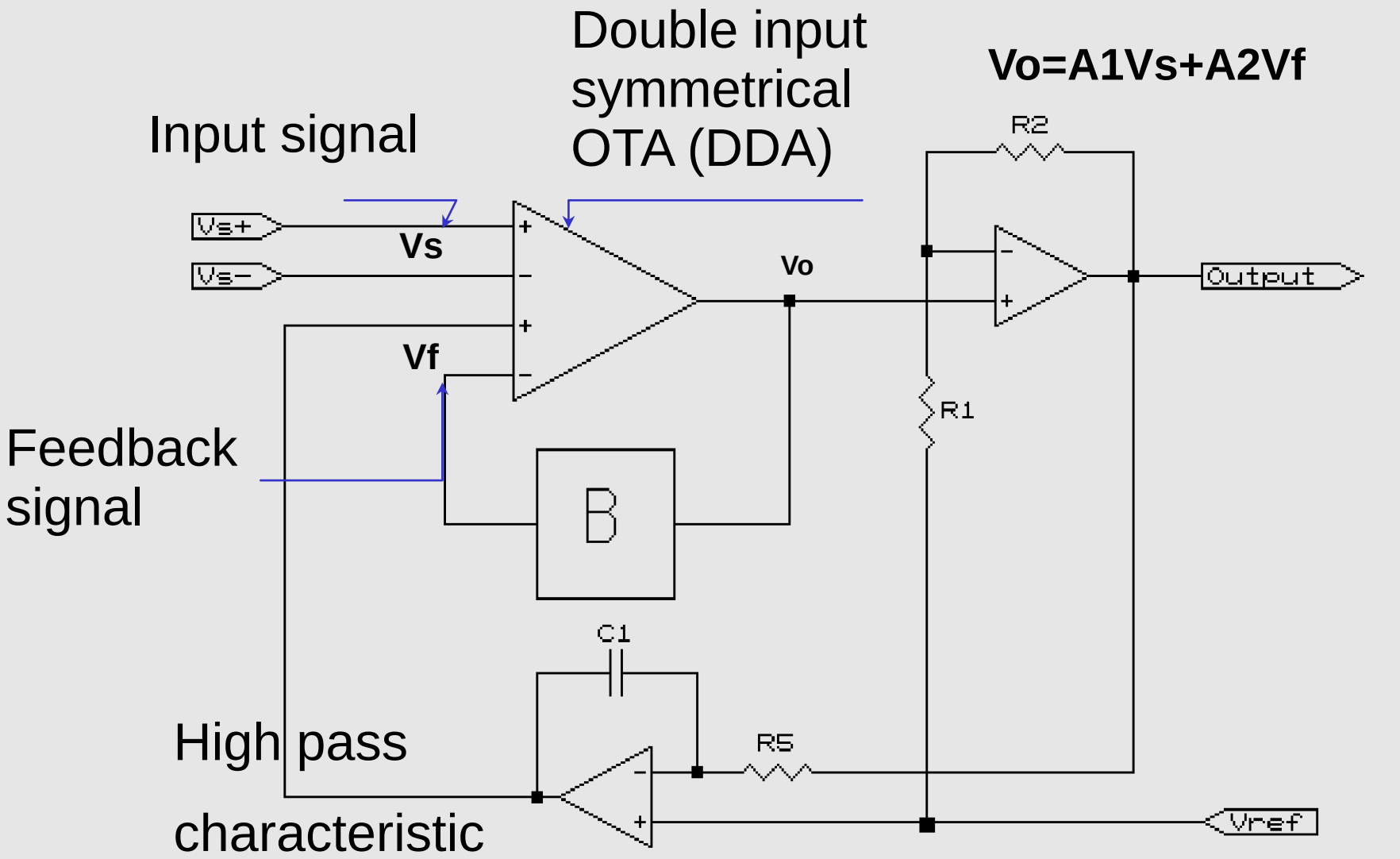

ISCAS 1998

Accelerometer Signal Conditioning (2): Layout and results

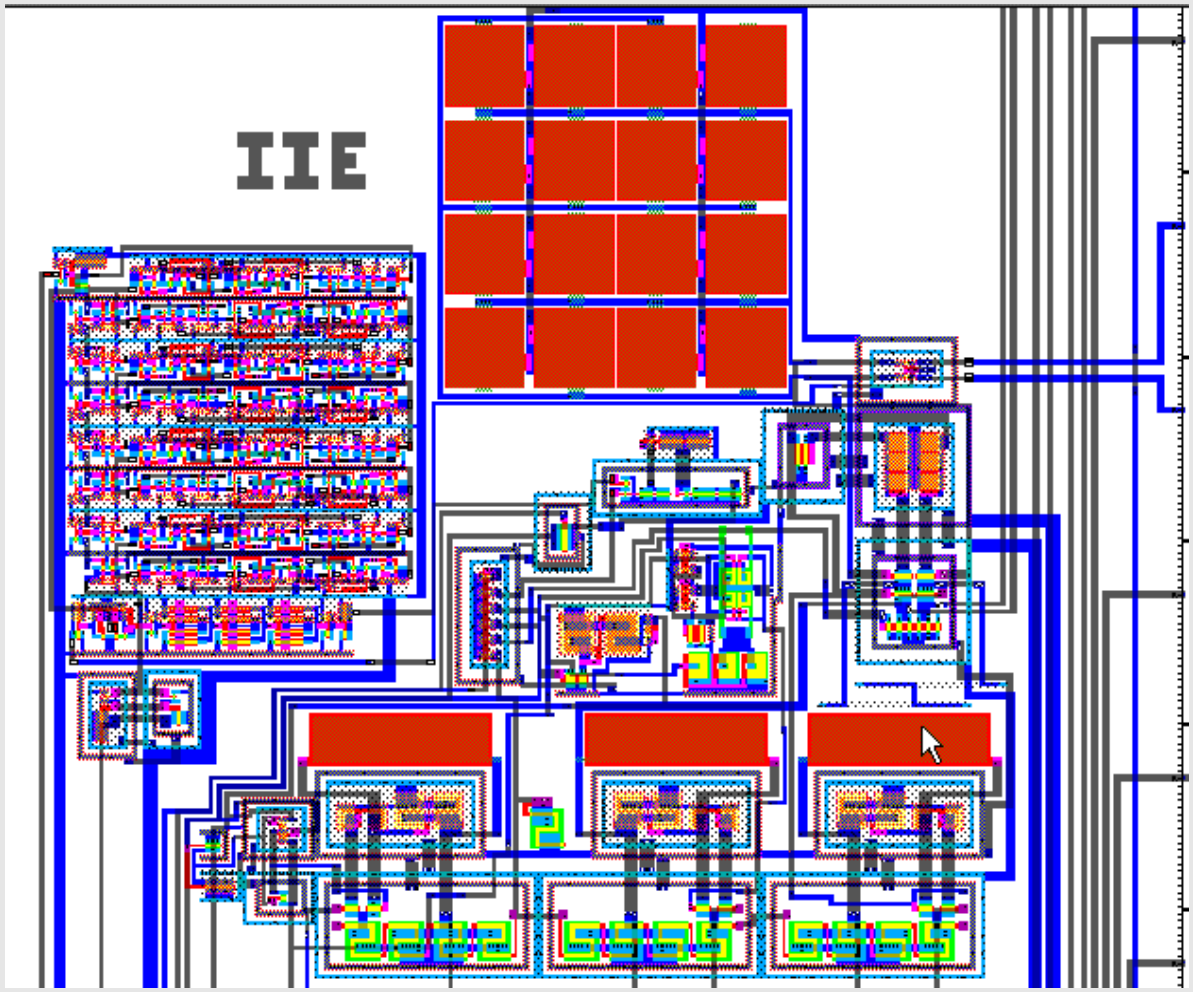

Gain	2900
Equivalent input noise (μVrms)	18
Consumption (μA)	3.4
Area (mm^2)	1.82

Accelerometer Signal Conditioning (3): Results

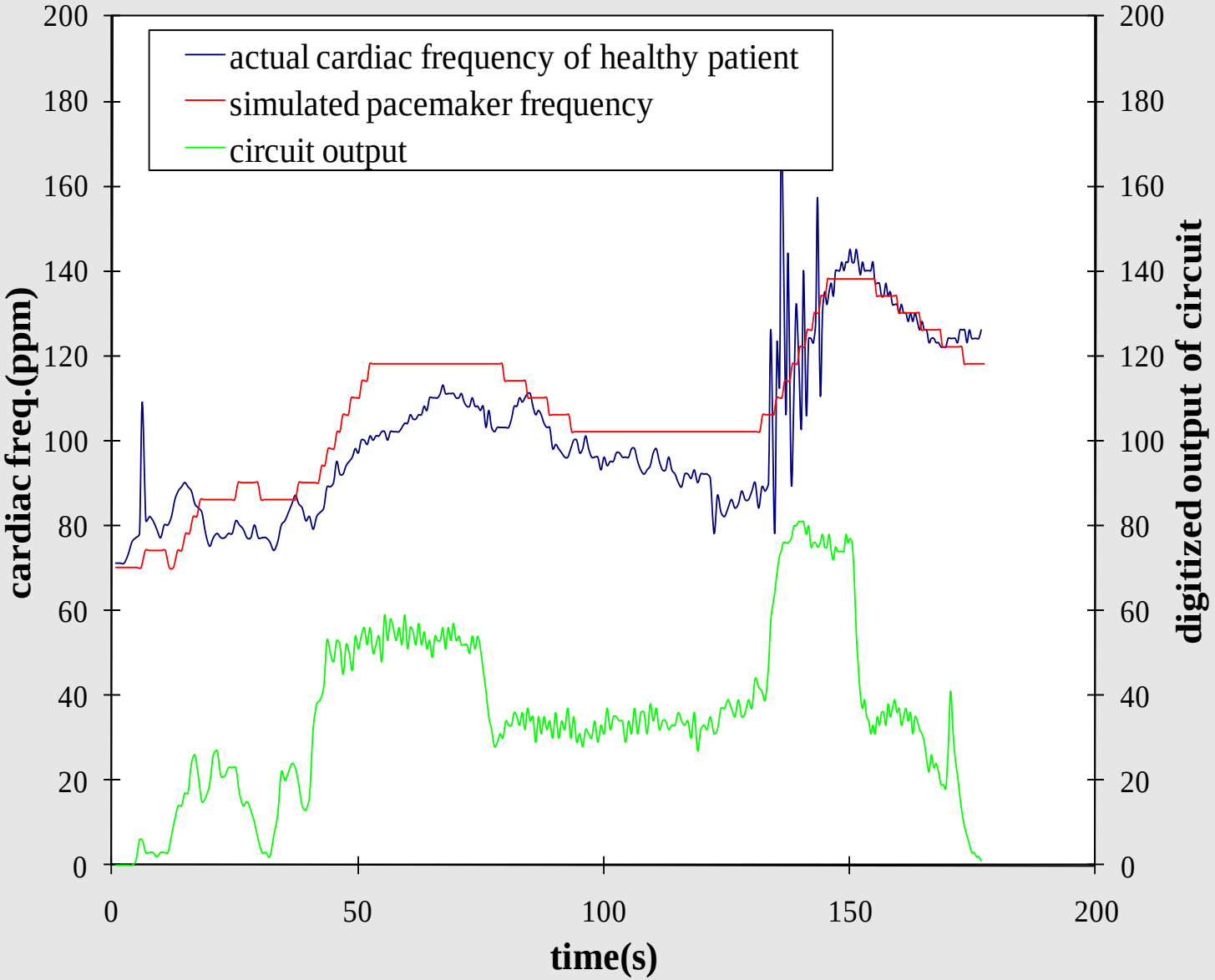

Accelerometer Signal Conditioning (4) : Gm-C implementation

A. Arnaud (UR), C. Galup (UFSC), ISCAS 2004

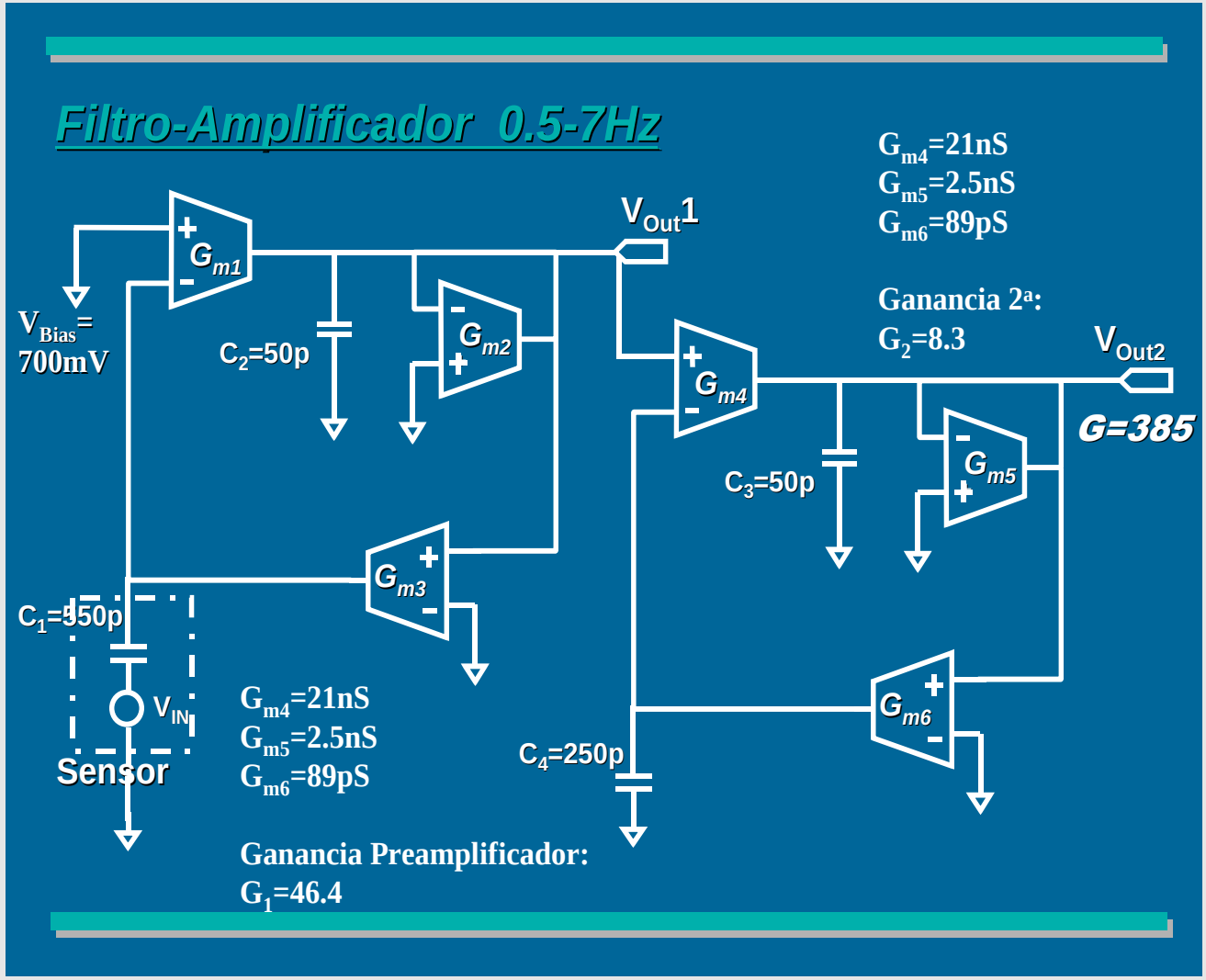

I_{DD}= 290nA
Equivalent Input noise: 2.1μVrms
Gain: 390
Fully integrated

Example of modules: Neural Recording Amplifier

- **Objective: Signal detection from e.g: cuff electrodes or cortical electrodes arrays**
- **Requirements:**
  - **0.5μVrms - 2μVrms noise**
  - **BW: 300Hz – 8kHz**
  - **High CMRR (particularly in Cuff)**
  - **Block high DC offsets (100mV or more) due to electrode/tissue contact**
  - **Negligible DC input current**

Example: Cuff Electrode Recording in Neurostep

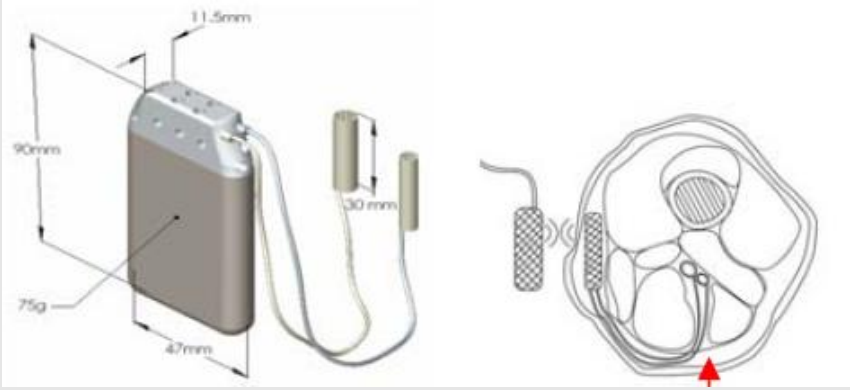

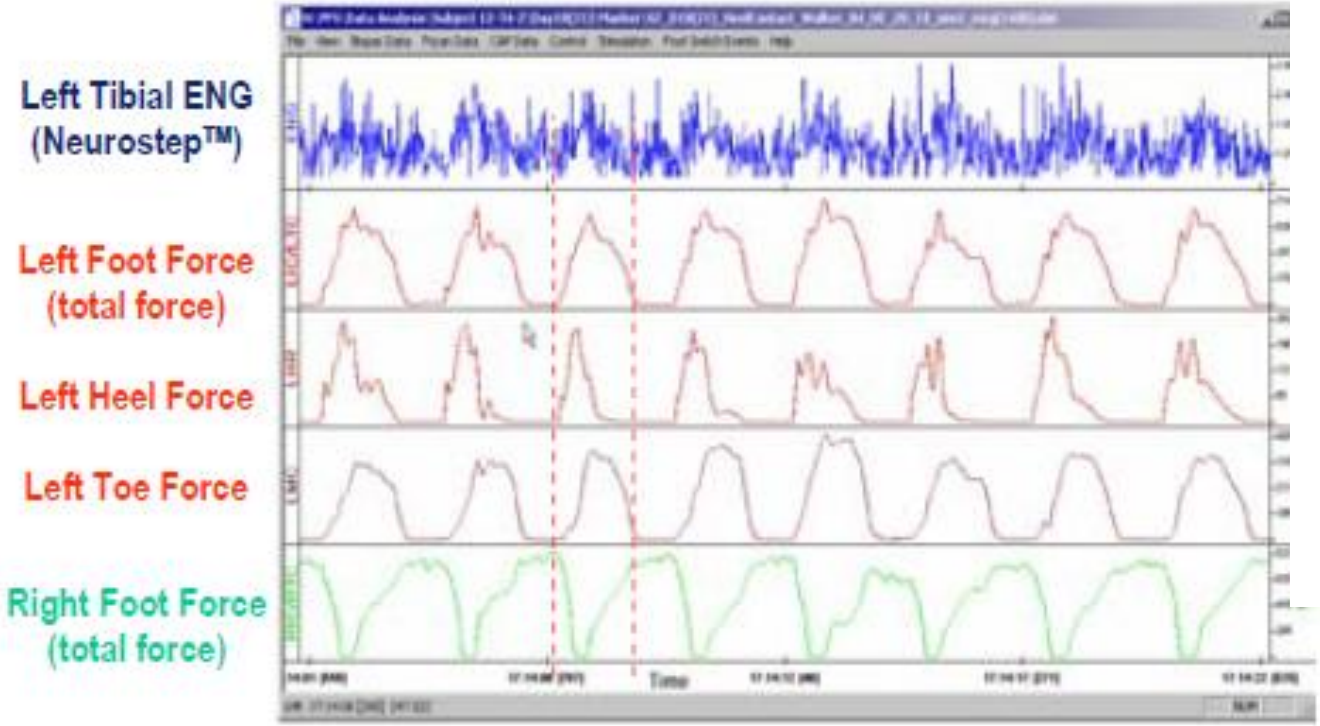

Hoffer et al, IFESS 2005

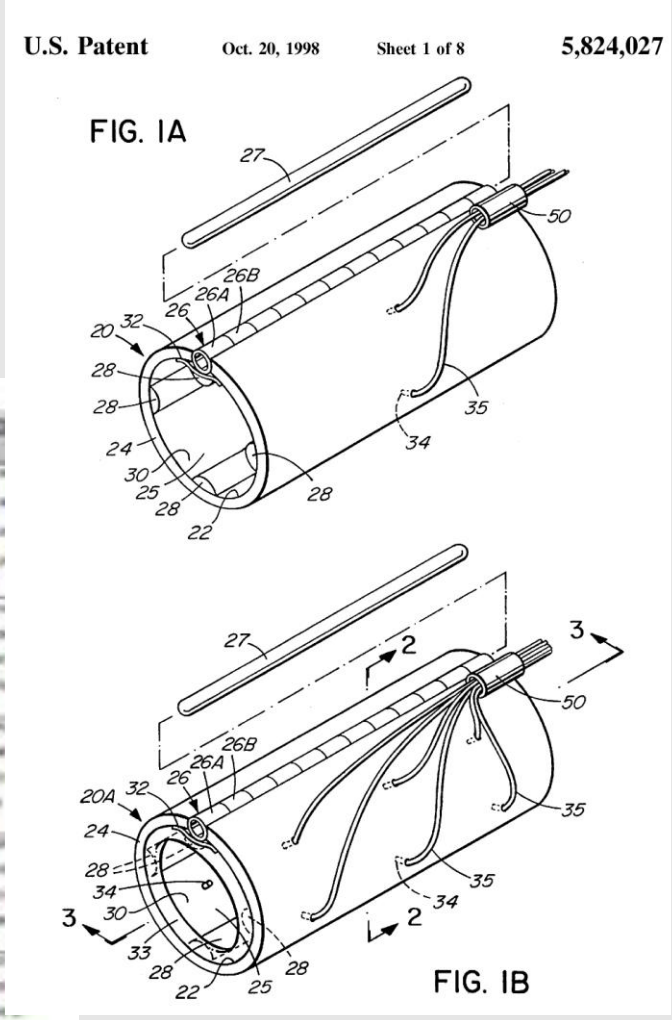

Hoffer et al, US Patent 5,824,027 / 1998

Example: Cortical Recordings

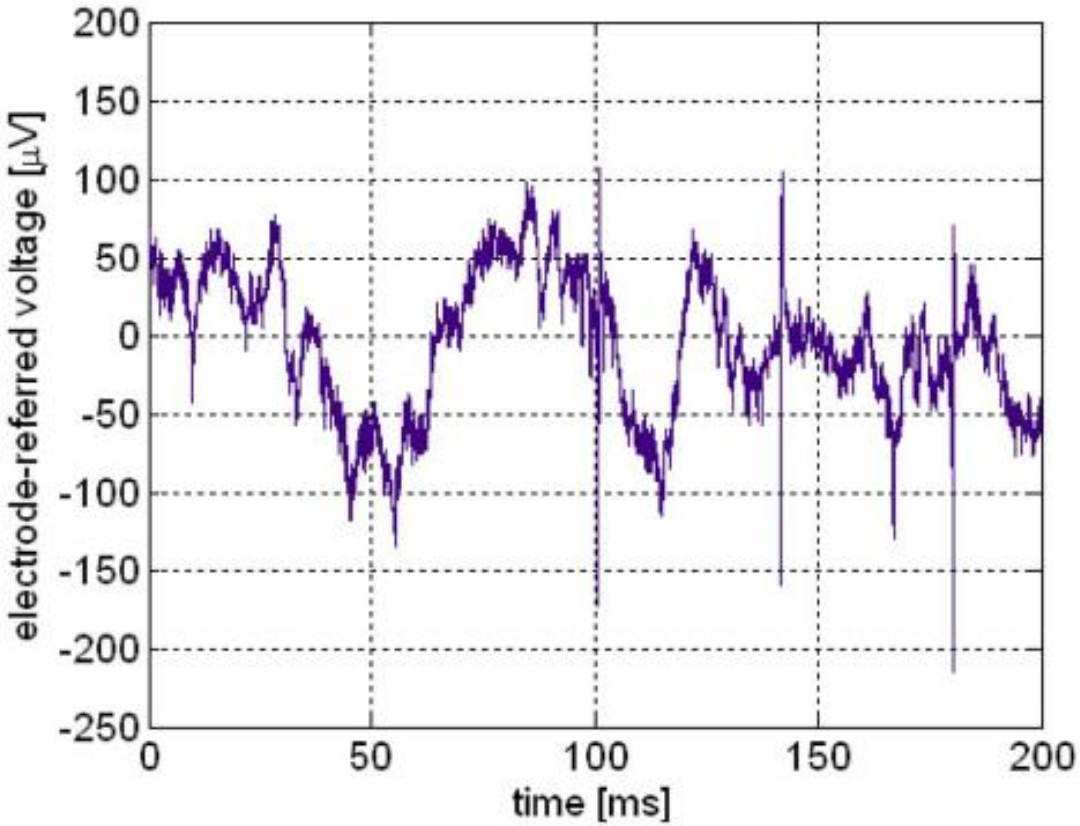

Fig. 2. *Neural recording from cat motor cortex using Utah Electrode Array and integrated CMOS amplifier. Both spikes and LFPs are visible.*

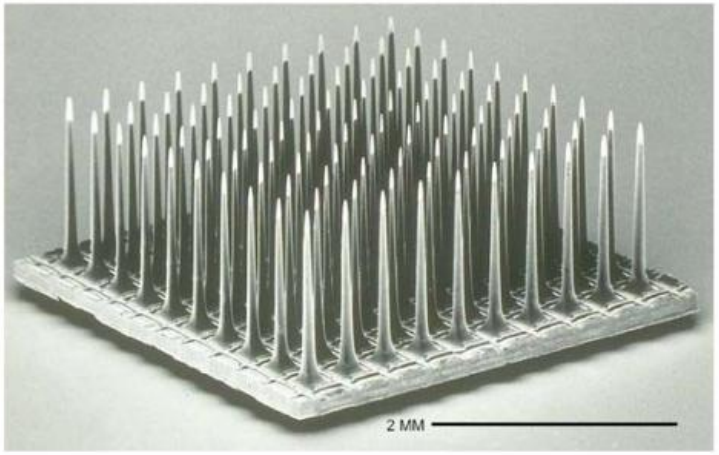

Harrison, Proc. IEEE, July 2008

Neural Amplifier Front End (1): Capacitive Feedback

- Inversion region for noise / power optimization: e.g. input pair weak inversion, current mirror active load: strong inversion
- CMRR limited by capacitor matching.

$$\mathrm{NEF} = V_{ni,\,\mathrm{rms}}\sqrt{\frac{2I_{\mathrm{tot}}}{\pi \cdot U_{\mathrm{T}} \cdot 4kT \cdot \mathrm{BW}}}$$

Gain	40 dB
BW	0.13 Hz / 7.5 kHz
Itotal	16 μA
NEF	3.8
vnoise rms	2.1 μV
CMRR	> 42 dB

Harrison et al, IEEE JSSC, June 2003

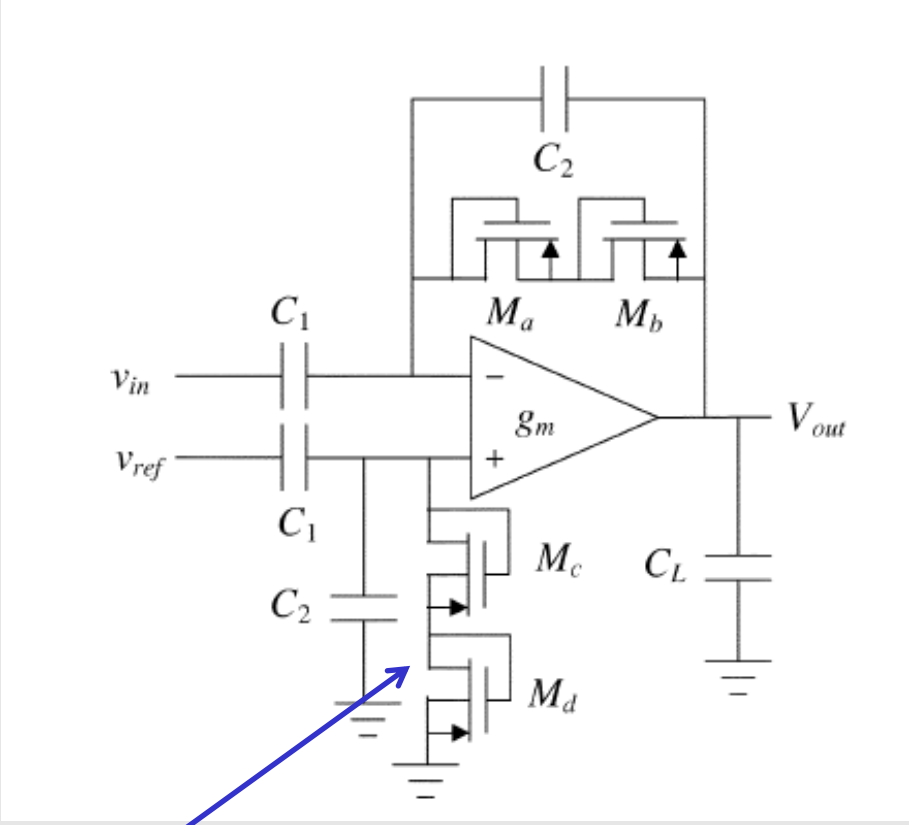

MOS –Bipolar Pseudoresistor (100s Mohms equivalent)

Neural Amplifier Front End (2): DDA Based

- ☺ High CMRR (Given by Input Differential Pair)
- ☹ Both Differential Pairs contribute equally to Input Noise (hence to area and consumption)

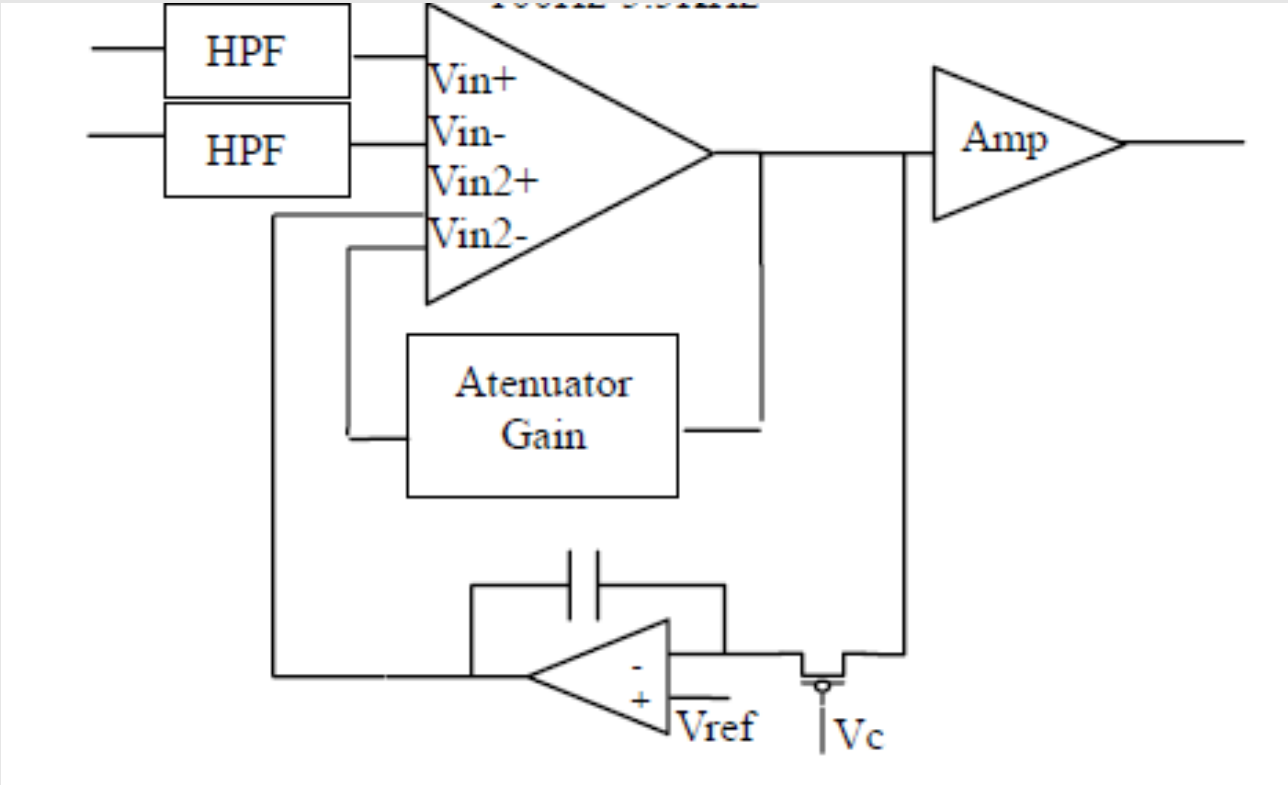

J. Sacristán, T. Oses, IFESS 2002,

Another DDA Based Scheme: M. Baru, U.S. Patent 6.996.435, 2006

Neural Amplifier Front End (3): "Asymmetrical" DDA Based (I)

- ☺ Effect of noise (and hence consumption and area) of Gm2 greatly reduced while keeping high CMRR (given by input differential pair)
- Gm2 less effective in compensating input offset and DC components => Output DC and high pass characteristic fixed by local feedback at the output

P. Castro, F. Silveira, ISCAS 2011

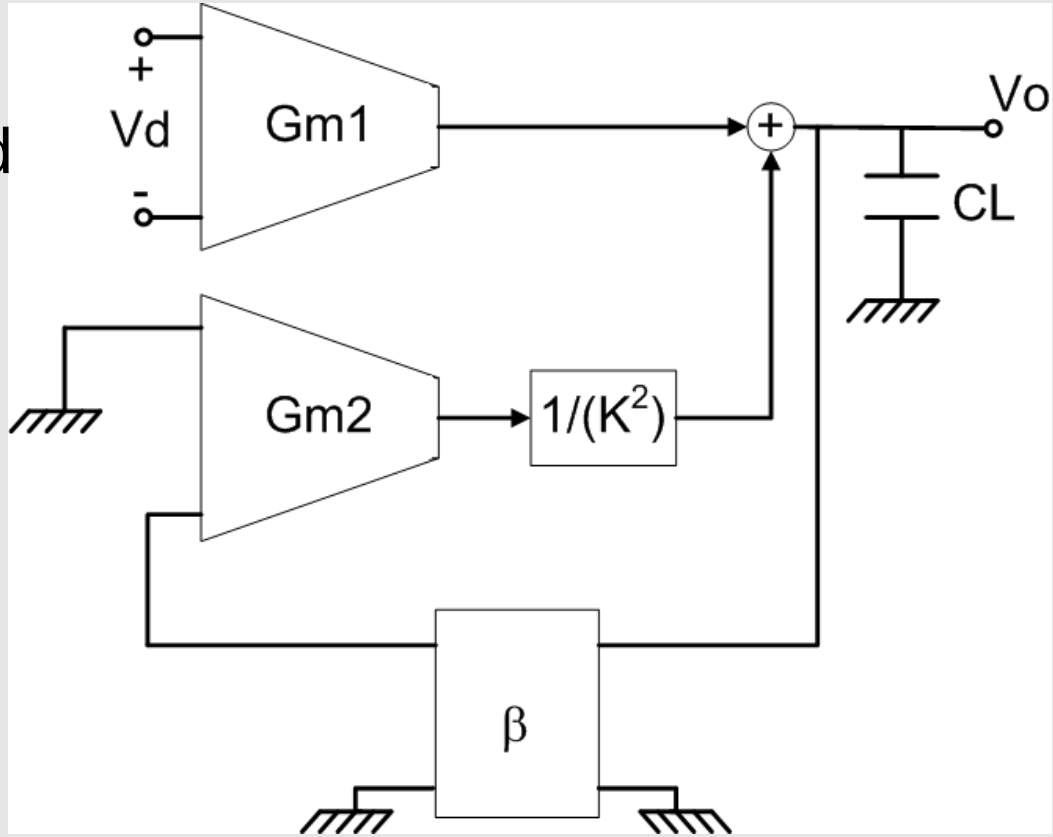

Neural Amplifier Front End (4): “Asymmetrical” DDA Based (II)

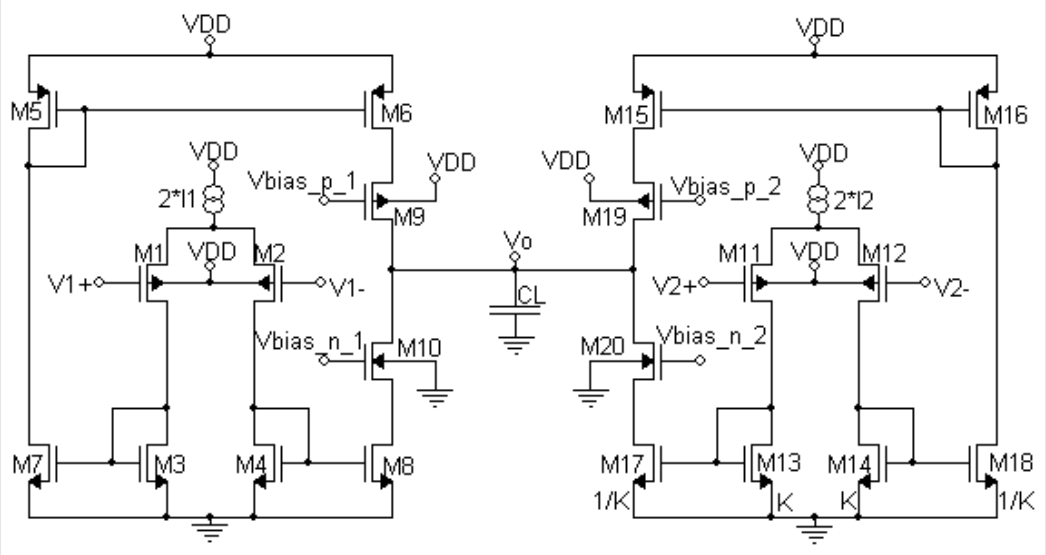

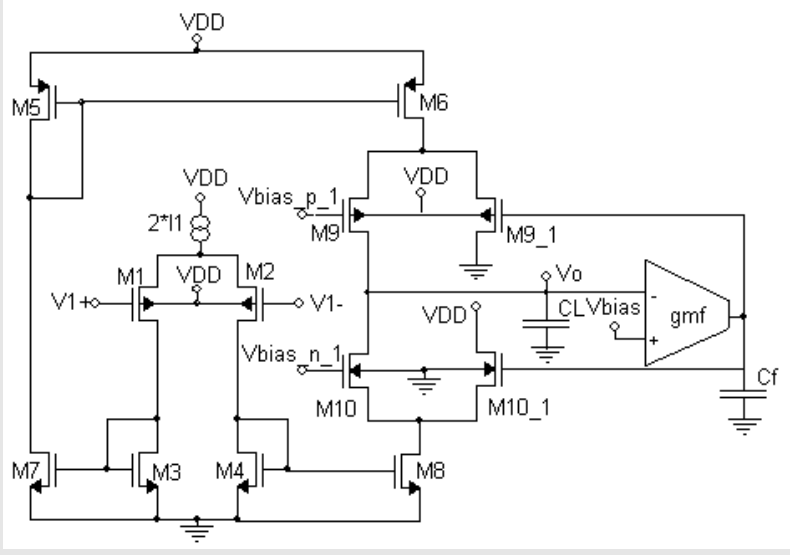

Spec	Castro, ISCAS 2011	Harrison, JSSC 2003	Wattapanitch, TR. BIOCAS 2007	Sacristan, IFESS 2002
Architecture	Asym. DDA	Capacitive	Capacitive	DDA
A (dB)	48	40	41	80
NEF	4.2	3.8	2.7	53.4
Itotal(μA)	16.5	16.0	2.7	180
vi noise (μVrms)	2.4	2.1	3.1	7.6
CMRR	> 107	> 42	> 66	90

Outline

I. System: Active Implantable Medical Devices Today

II. Transistors and Circuits: Analog Design for ULP.

- Transistor Modeling.
- Design Methodology.

III. Circuit Techniques: Implementation of AIMDs blocks

IV. Conclusions and Prospects

Prospects: Digital vs. Analog

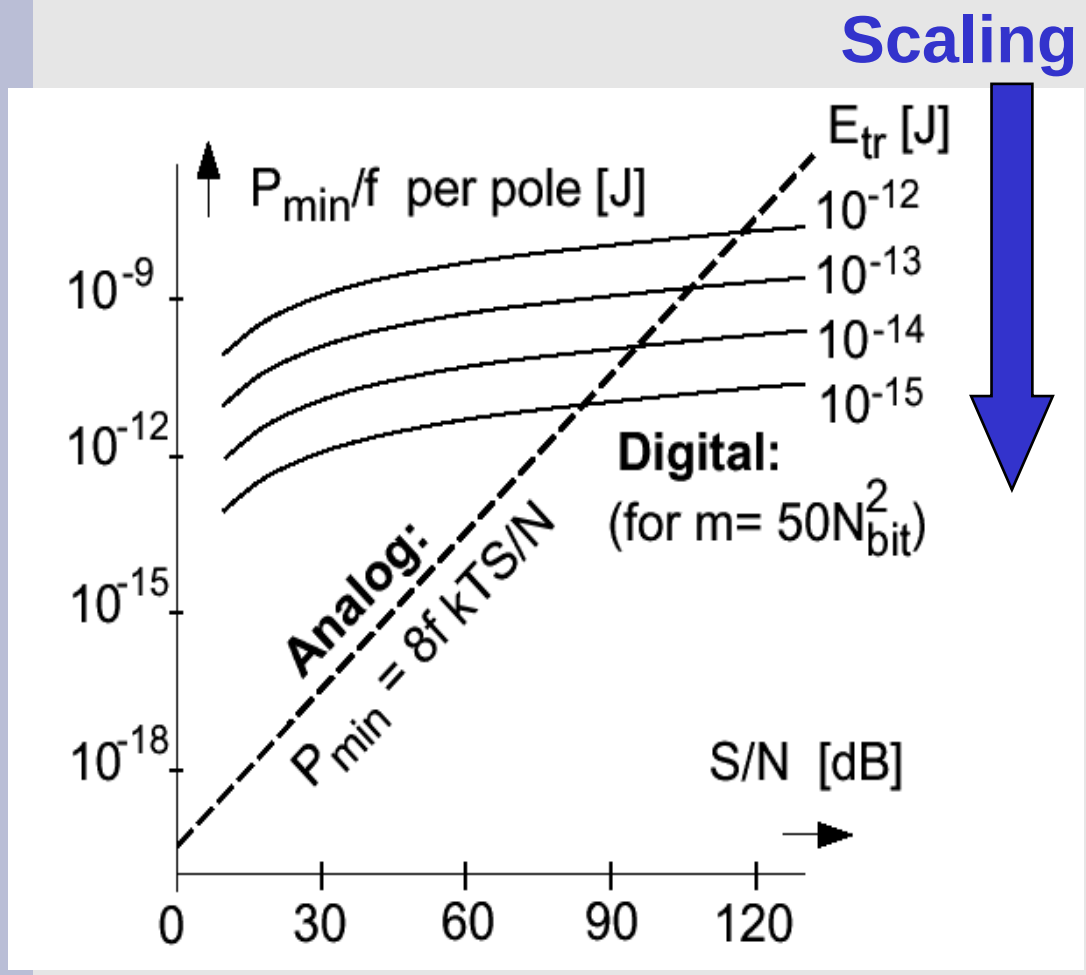

Source: E. Vittoz

- **Theoretical limits of power** consumption for **Analog and Digital** Signal Processing
- Analog better for low S/N, but the border is moving ...
- “Digital” pacemaker already present in marketing

Prospects: Analog ULP and AIMD

- Intense growth of applications / therapies on development and reaching the market
- Broad Analog / Circuit research area:
  - Sensing
  - Stimulation, Power Management / Battery Recharge, Communication, …
  - Once very specific area, now wider (wireless sensor networks, body area networks, portable devices, energy scavenging devices, RFID, ...).

Prospects: AIMDs
Brain Computer Interface

Set. 2000, Nicolelis, Duke University

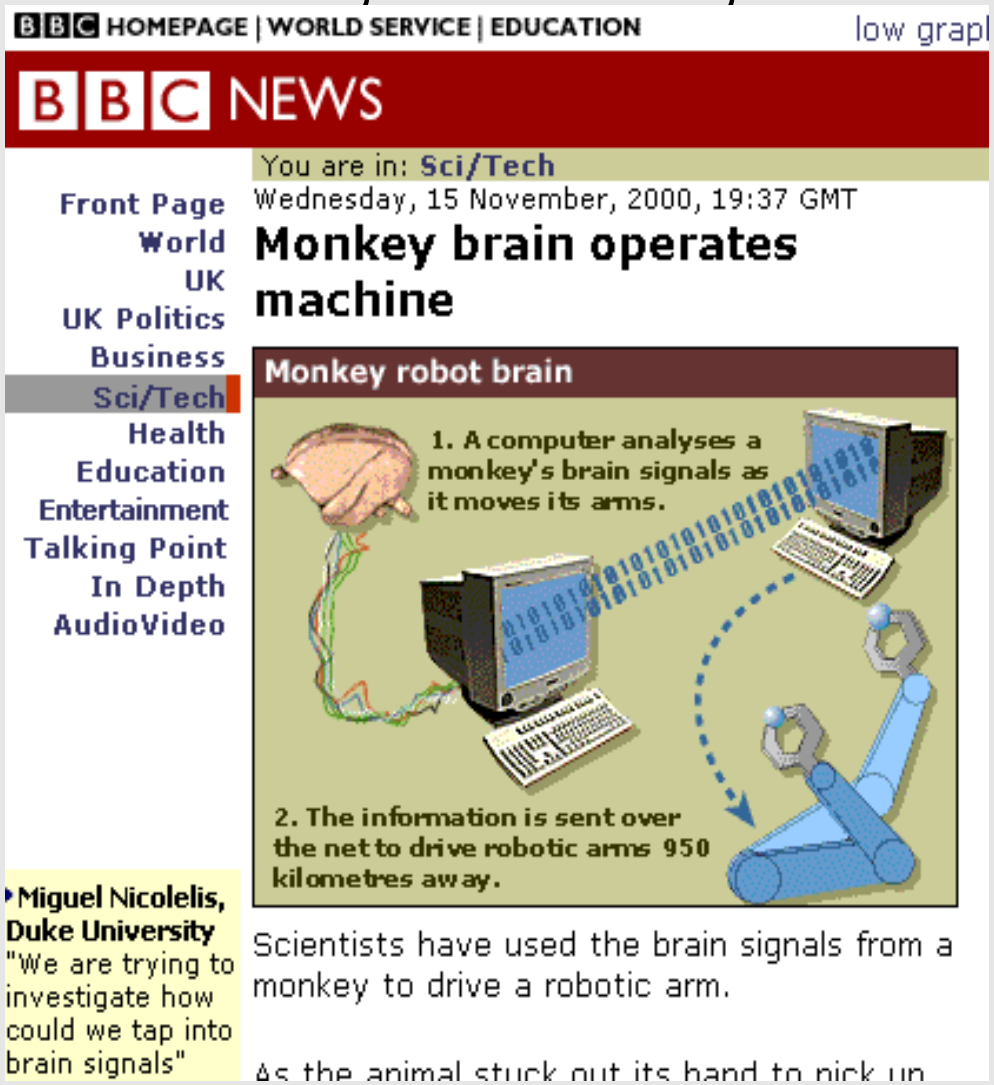

BBC HOMEPAGE | WORLD SERVICE | EDUCATION low grapl

BBC NEWS

You are in: Sci/Tech

Front Page
World
UK
UK Politics
Business
Sci/Tech
Health
Education
Entertainment
Talking Point
In Depth
AudioVideo

Wednesday, 15 November, 2000, 19:37 GMT

Monkey brain operates machine

Monkey robot brain

1. A computer analyses a monkey's brain signals as it moves its arms.

2. The information is sent over the net to drive robotic arms 950 kilometres away.

Miguel Nicolelis, Duke University
"We are trying to investigate how could we tap into brain signals"

Scientists have used the brain signals from a monkey to drive a robotic arm.

As the animal stuck out its hand to pick up

Prospects: AIMDs
Brain Computer Interface

Mar. 2002, M. Serruya, J. Donoghue, Brown University

NATURE | VOL 416 | 14 MARCH 2002 | www.nature.com

brief communications

Instant neural control of a movement signal

Hands-free operation of a cursor can be achieved by a few neurons in the motor cortex.

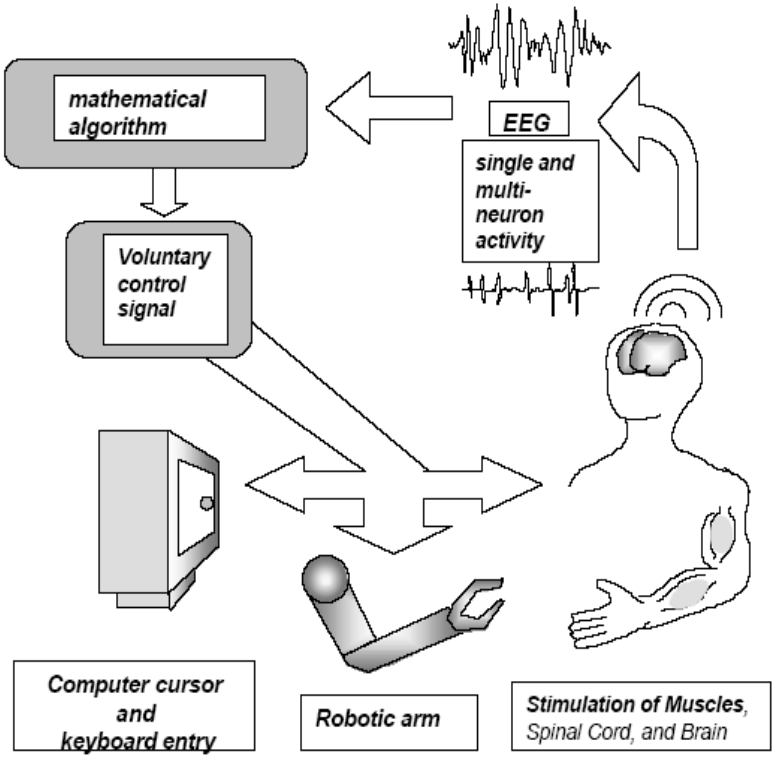

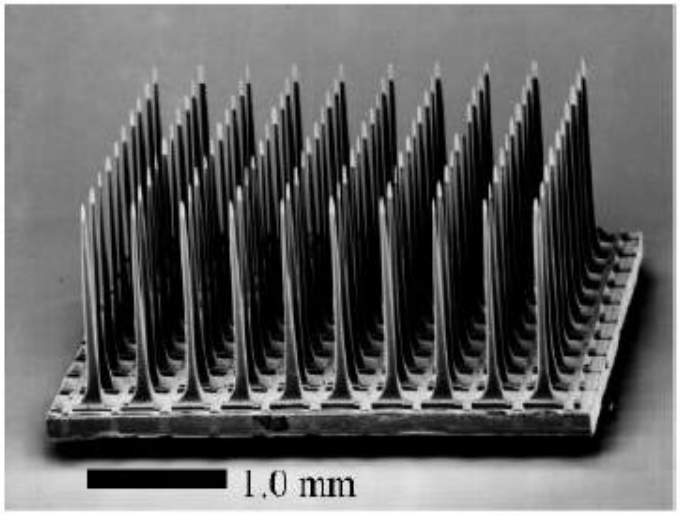

Source: Mijail Serruya

Prospects AIMDs: Brain Computer Interface

July 2004: Pilot FDA trial started by spin/off company of Brown Univ., several tetraplegic patients implanted.

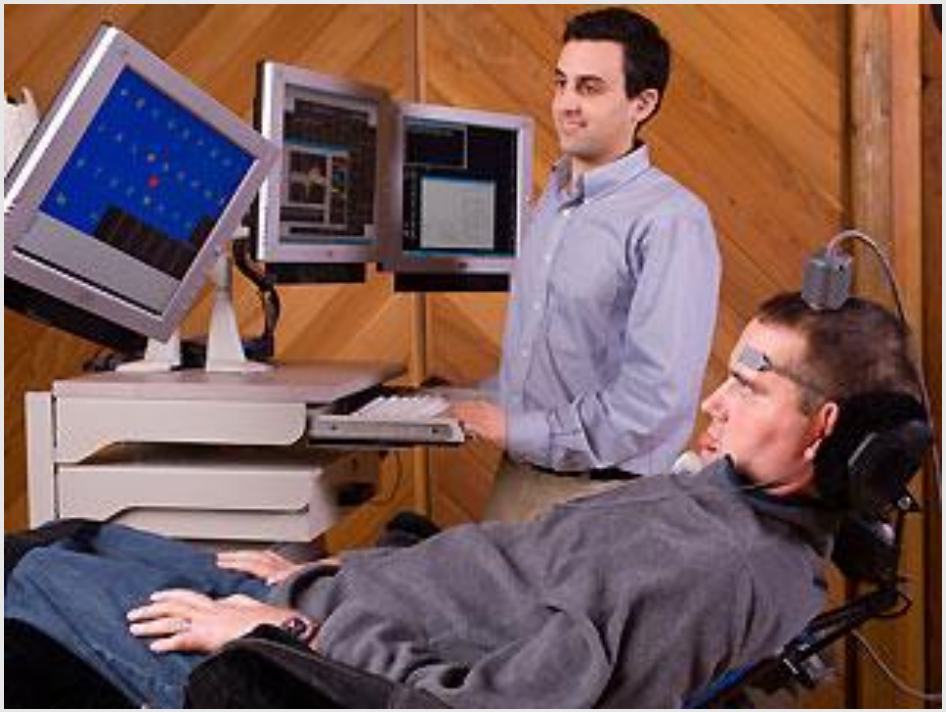

Some Conclusions

•ULP ICs for AIMDs: Each nA counts => **Methodology and Optimization**

•AIMDs: Very broad field in strong expansion

- ✓ Many R & D opportunities
- ✓ Microtechnology is often the enabling factor.

•AIMDs: Price is not the main concern, but application and performance

- ✓ Suitable for developments with lower volume productions than in other areas
- ✗ High investment associated with long development cycles, qualification, clinical testing and regulatory aspects.

Microelectronics Group – IIE
Universidad de la República

More Information

iie.fing.edu.uy/vlsi

silveira@fing.edu.uy

Acknowledgements

- IEEE CASS
- CCC Medical Devices, NanoWattICs
- Members (present and past) of Microelectronics Group, UR

Thank you !