CMOS for Ultra Wideband and 60 GHz Communications

Bob Brodersen
Dept. of EECS
Univ. of Calif.
Berkeley

Berkeley Wireless Research Center

http://bwrc.eecs.berkeley.edu

19 GHz of Unlicensed Bandwidth!

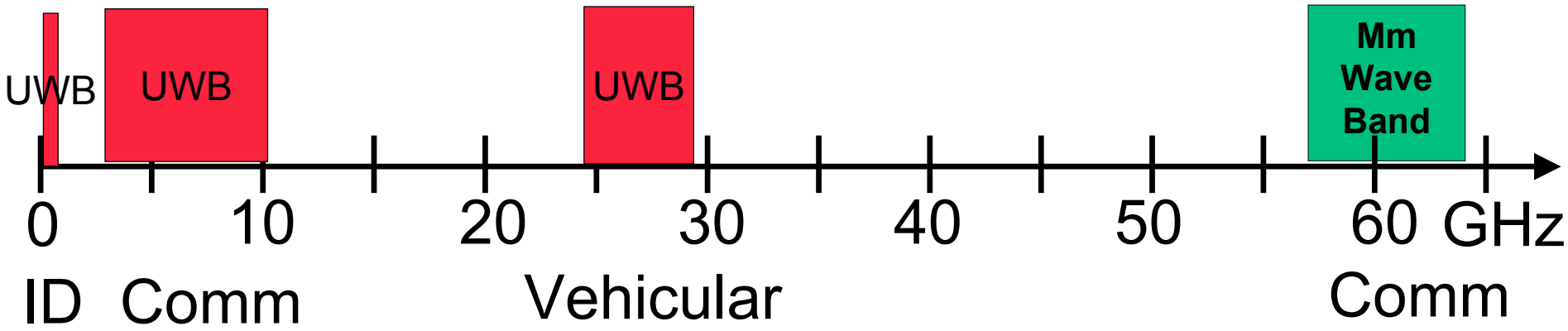

- The lower UWB bands have use restrictions, but FCC requirements will allow a wide variety of new applications
- The 57-64 GHz band can transmit up to .5 Watt with little else constrained – it could be used for a “high power” UWB

Lets Start with UWB – A different regime…

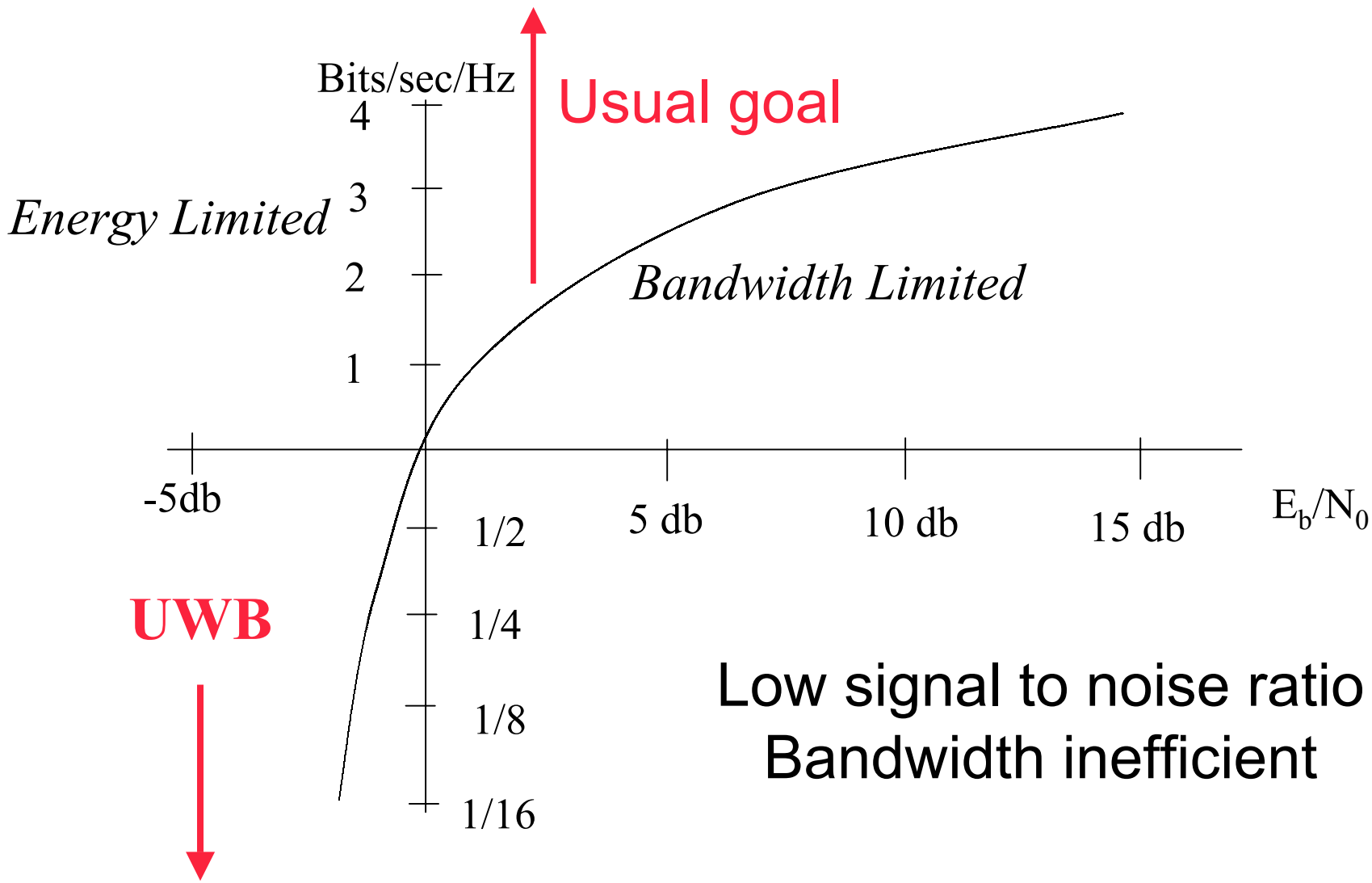

Low signal to noise ratio
Bandwidth inefficient

Signaling Approaches

Sinusoidal, Narrowband

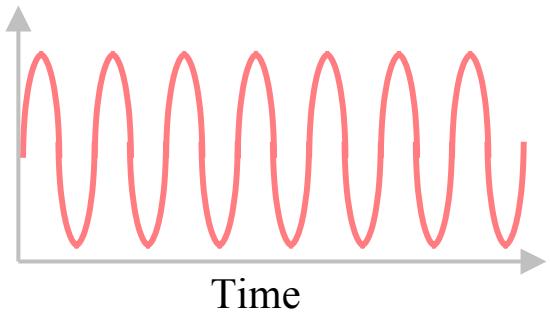

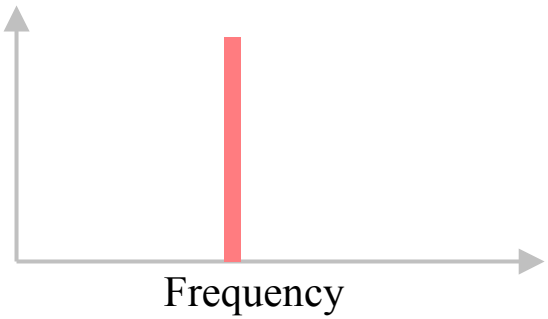

Impulse, Ultra-Wideband

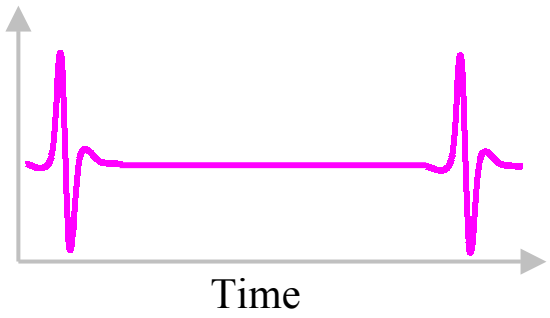

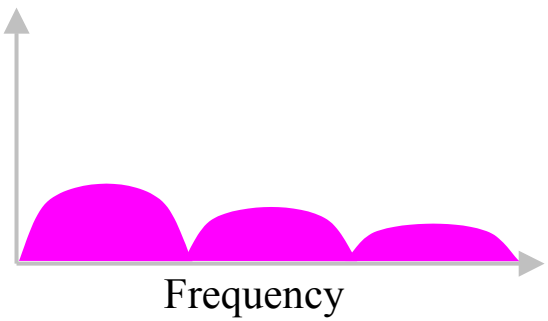

FCC Emissions Limit for Indoor Systems

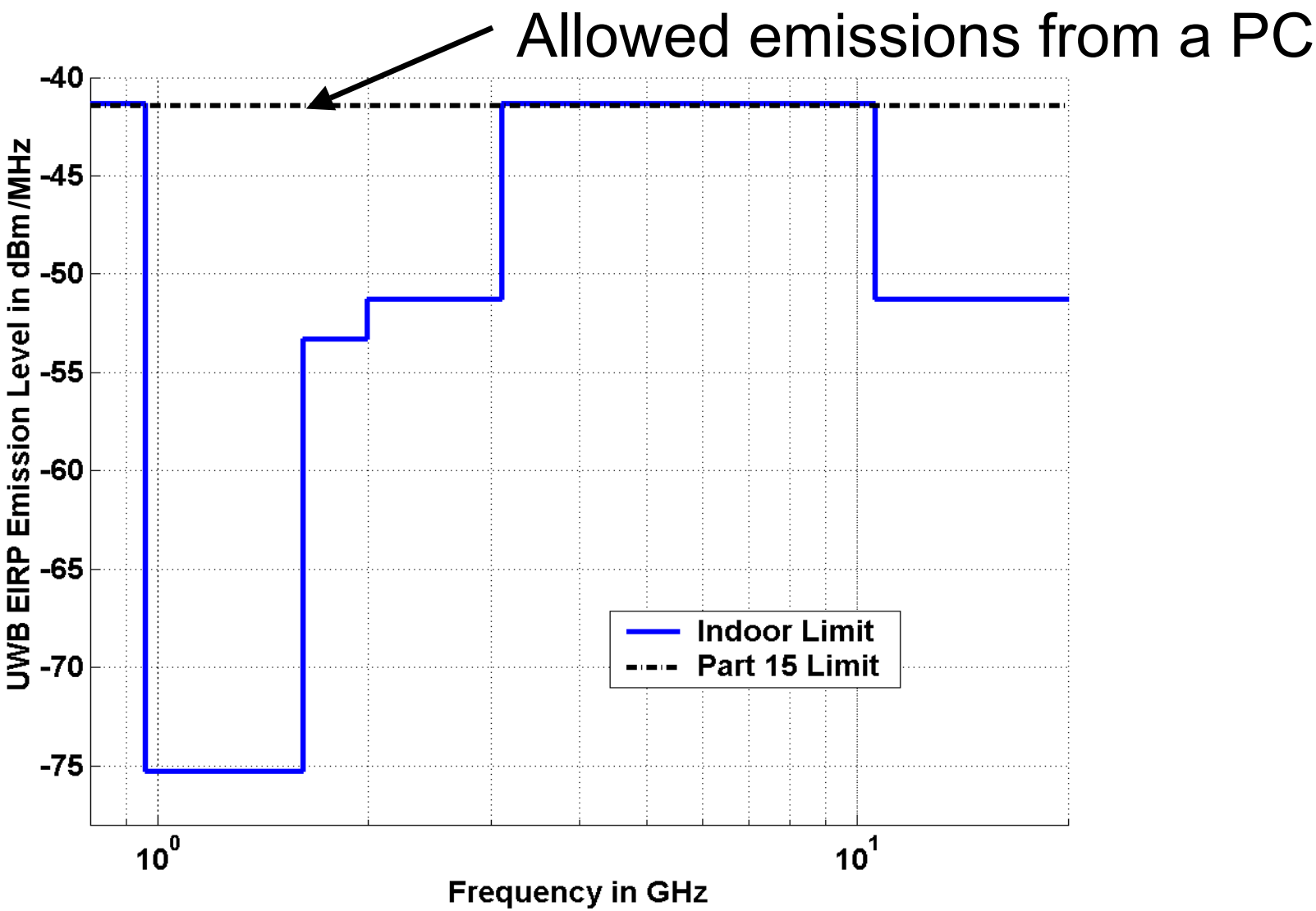

Two Standards (Application Areas) Evolving – First one is 802.15.3a

High Speed, Inexpensive Short Range Communications (3.1-10.6 GHz)

- FCC limit of -41dBm/Mhz at 10 feet severely limits range
  - Even using all 7.5 GHz of bandwidth the maximum power that can be transmitted is equivalent to having -2dBm *(.6 mW)* from an isotropic radiator (EIRP)
  - For short range communications this may be OK – e.g. line of sight from 10 feet for connecting a camcorder to a set-top box, "wireless Firewire"
- Advantage is that it should be less expensive and lower power than a WLAN solution (since 802.11a > 100 Mbits/sec for short range) – goal is to be the same as Bluetooth

High rate - 802.15.3a (proposals)

- Bit rate should be at least
  - » 110 Mb/s at 10 meters
  - » 200 Mb/s at 4 meters
  - » >480 Mb/s at ?
- Power consumption
  - » <110 mW for 110 Mb/s
  - » < 250 mW for 200 Mb/s

Two Approaches

- Using conventional frequency domain techniques in 500 MHz sub-bands – which are further subdivided using OFDM

- Impulse Radios – a “time domain” approach

Frequency domain approach: OFDM with Freq hopping (TI, Intel)

- OFDM with Viterbi – basically a wideband 802.11a
  - » 25 times more bandwidth than 802.11a
  - » QPSK sub-channel modulation (3-4 bit A/D's at > 1 GHz)
- Fast frequency hopping for multi-access and interference avoidance
  - » In the OFDM guard interval over 1.5 GHz (TI proposal)
  - » More than 100 times faster hopping than Bluetooth
  - » Over 20 times more bandwidth than Bluetooth
  - » Too fast for digital synthesis so needs to be an analog implementation

Time Domain Approach: Impulse Radio

Transmitted Signal	Outdoor Rcvd Clear LoS	Office Rcvd Clear LoS

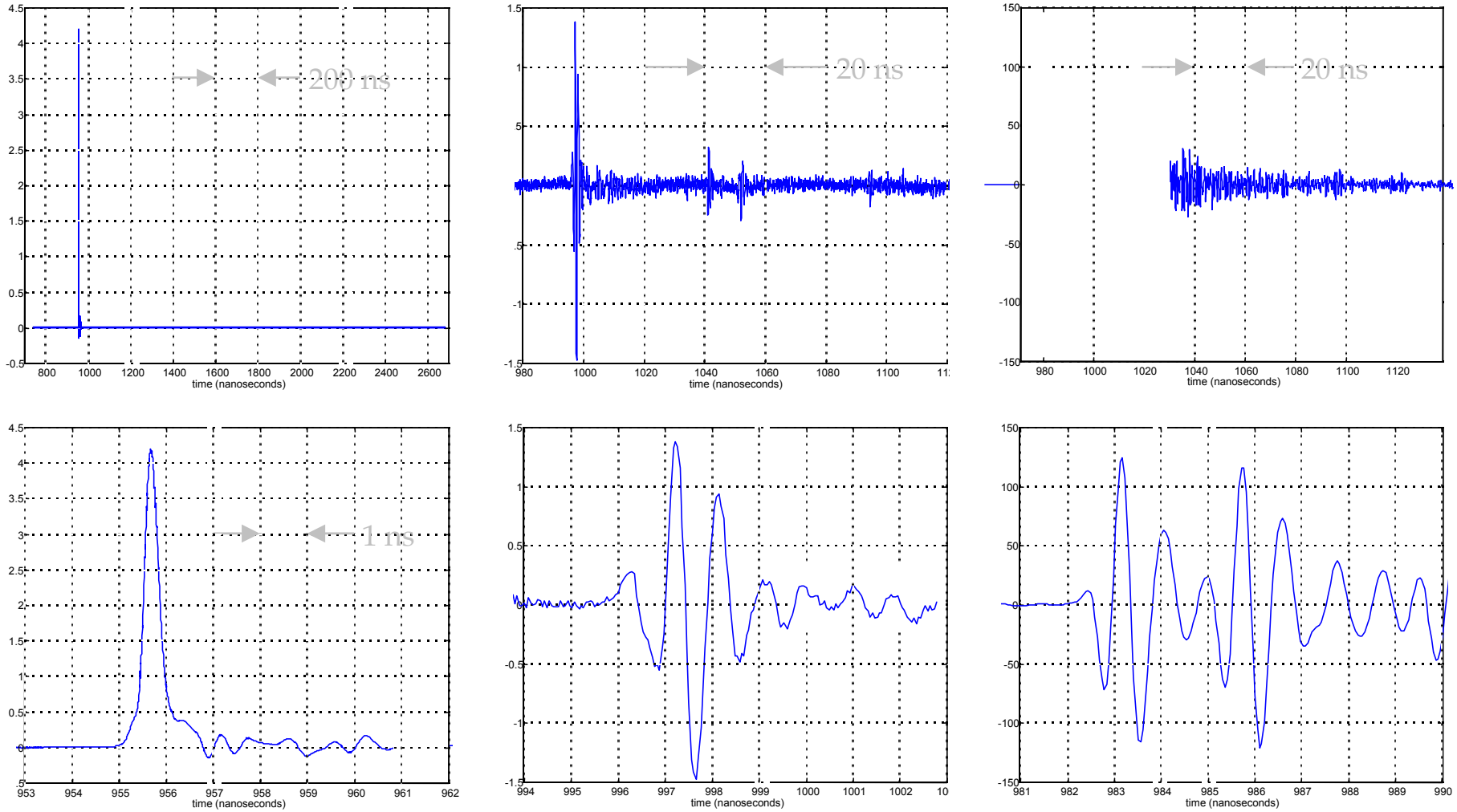

(From Bob Scholtz – USC Ultralab)

Impulse Based Signaling

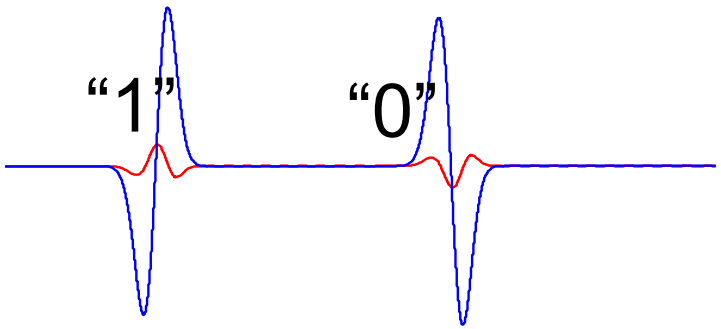

Biphase signalling

- Basically pulsed rate data transmission – sort of optical fiber without the fiber…
- Key design problem, as in wireline transmission, is time synchronization
- New problem is very large ISI from muiltipath and low signal to noise ratios

Totally new kind of radio – unknown implementation requirements

Observation

Most probable strategy for UWB to make an impact in high rate at much lower power and cost than existing techniques is to use a pulse based approach

Hard to understand that by scaling up conventional techniques by an order of magnitude that power and cost will reduce by an order of magnitude???

Second Application Area – 802.15.4a

Low Data Rate, Short Range Communications with Locationing (< 960 MHz)

- » Round trip time for pulse provides range information – multiple range estimates provides location
- » Used for asset tracking – a sophisticated RFID tag that provides location
- » Can be used to track people (children, firemen in buildings)
- » Sensor networks

Locationing and Imaging Applications

- Used for asset tracking – a sophisticated RFID tag that provides location
- Can be used to track people (children, firemen in buildings)
- Sensor networks (HVAC)
- Imaging behind walls
- Motion tracking

Location and Imaging (< 1 GHz)

- Transmit short discrete pulses instead of modulating code onto carrier signal
  - » Pulses last ~1-2 ns
  - » Resolution of inches

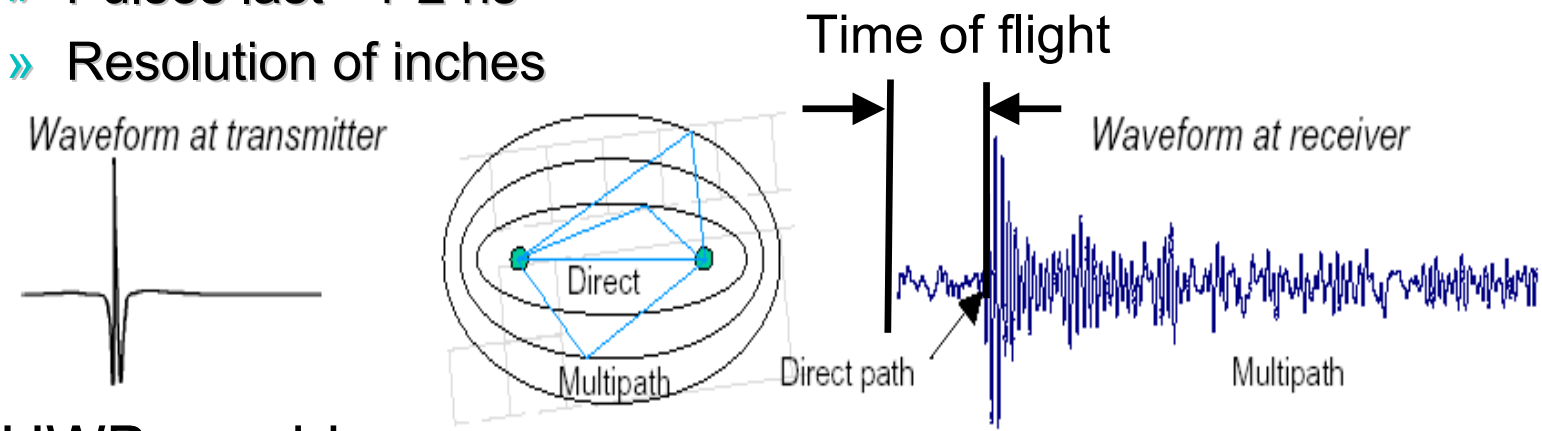

- UWB provides
  - » Indoor locationing measurements
  - » Relative location
  - » Insensitivity to multipath
  - » Material penetration (0-1 GHz band)

Locationing and Imaging (< 1GHz)

- Advantages
  - » Unique capability of UWB
  - » Mostly digital implementation with low performance analog
  - » Standards not as critical
- Disadvantages
  - » Markets not defined (but Microsoft has defined a standard and 802.15.4a is starting up)
  - » Unknown architectures

For UWB to be Disruptive

Exploit locationing and imaging capability

Or

High rate communications using a digital pulse based system

What about the IEEE/industry standards process?

- It is moving very fast to come up with a standard that is probably unimplementable (at least at low cost and power)
- Their history has been less than stellar
  - » Zigbee (a very primitive approach, but early)
  - » Home RF (hear about that any more?)
  - » Bluetooth (way too complicated)

Will UWB be next on this list?

Example design: UWB CMOS Transceiver Chip

A single chip CMOS UWB transceiver at power levels on the order of a few milliwatts for locationing and tracking applications

- » Flexible design for a wide range of data rates to investigate UWB transmission characteristics
- » For low rate applications, reception at below thermal noise levels
- » Develop limits of locationing accuracy

Being Implemented by PhD students Ian O'Donnell, Mike Chen, Stanley Wang

UWB Integrated Transceiver Project

Targeting Sensor Network Application

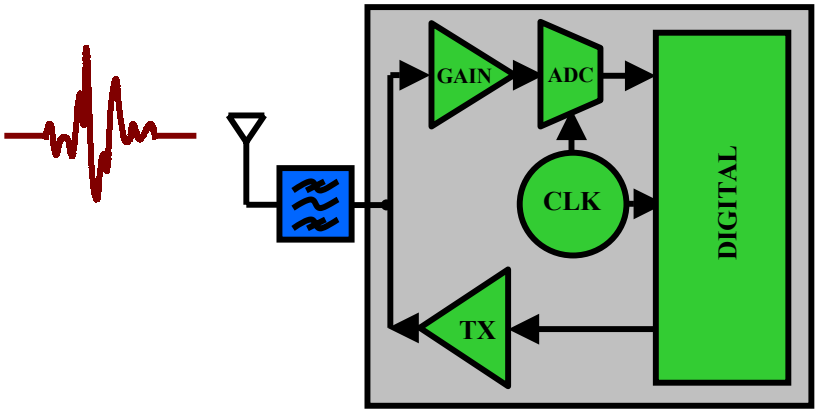

Specifications:

- 100kbps over 10m with 10^{-3} BER
- 1mW total (TX+RX) power consumption
- 0-1GHz bandwidth

All-CMOS Integrated UWB Transceiver

Aggressive Low-Power Design

"Mostly-Digital" approach, simplify analog front-end

Provide Flexible Platform for Further Research

http://bwrc.eecs.berkeley.edu/Research/UWB

CMOS Analog Frontend

Transceiver Analog Front-End

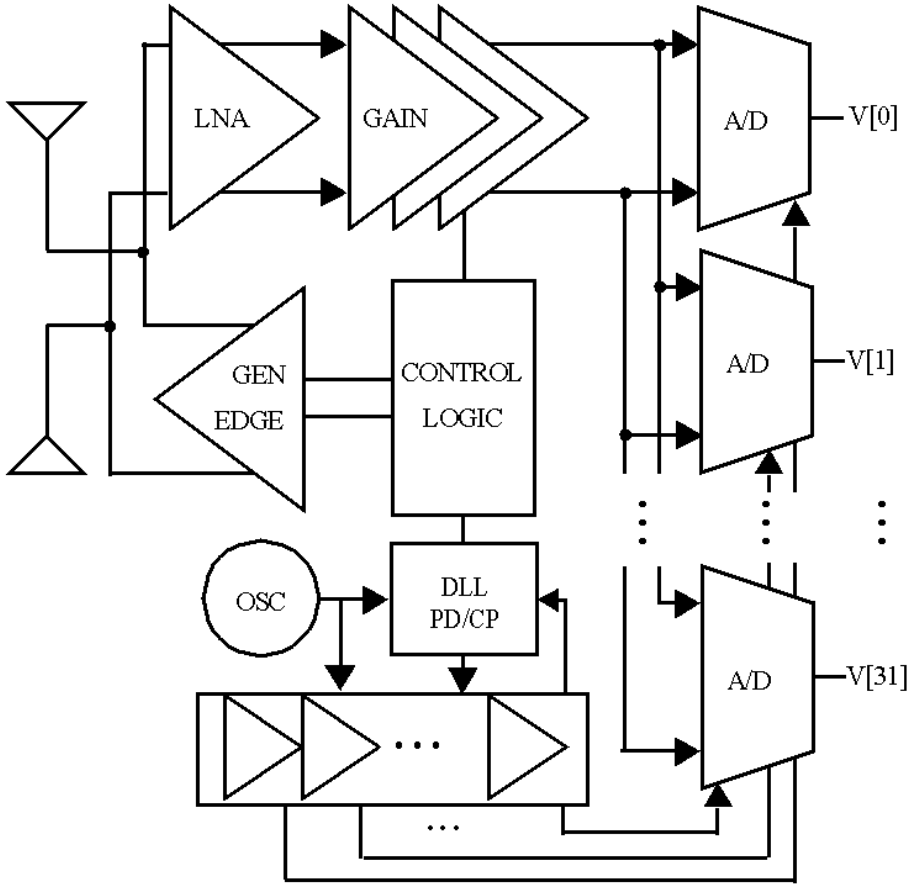

Focus:

- Low voltage, low power CMOS circuit design with minimum external components
- Accurate, flexible, controllable pulse reception window
- Antenna/circuit co-design

Status:

Design Nearly Complete
Some Layout Done

UWB Antenna

- UWB antenna for indoor wireless applications
  - Broadband
  - Omni-directional
  - Small size
- Small size -- Narrowband
  - Antenna Q ~ (λ^3)/(antenna size)
  - Almost impossible to have 50 ohm radiation resistance over the whole bandwidth
- Small size -- Omni-directional
  - Phase difference on the antenna is small

Need co-design of Antenna and LNA/pulser

6cm Dipole Antenna Input Impedance

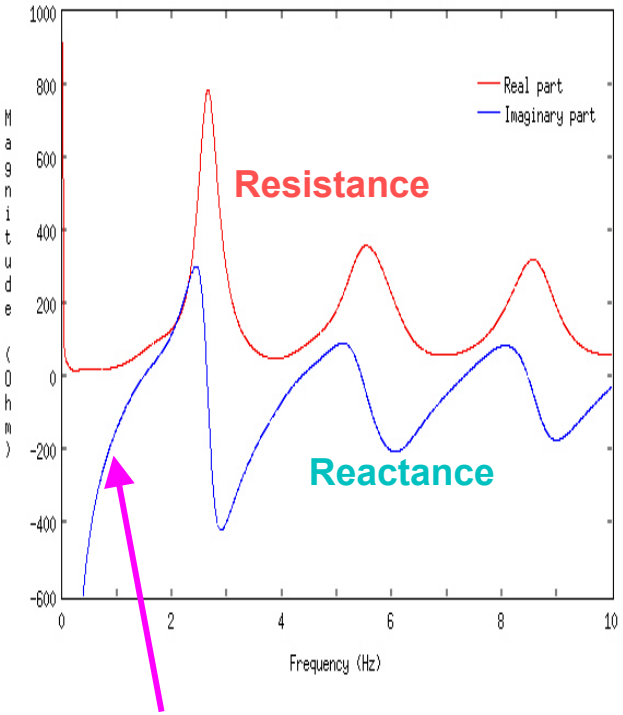

Reactance Dominates!

Small Antenna Modeling

Take small Loop Antenna as an example

- E-fields in all directions are with almost the same waveform
- Only one resistor in our model
- By superposition, waveform across Rrad is equal to the far-zone E-fields
- Can estimate radiated E-field in SPICE

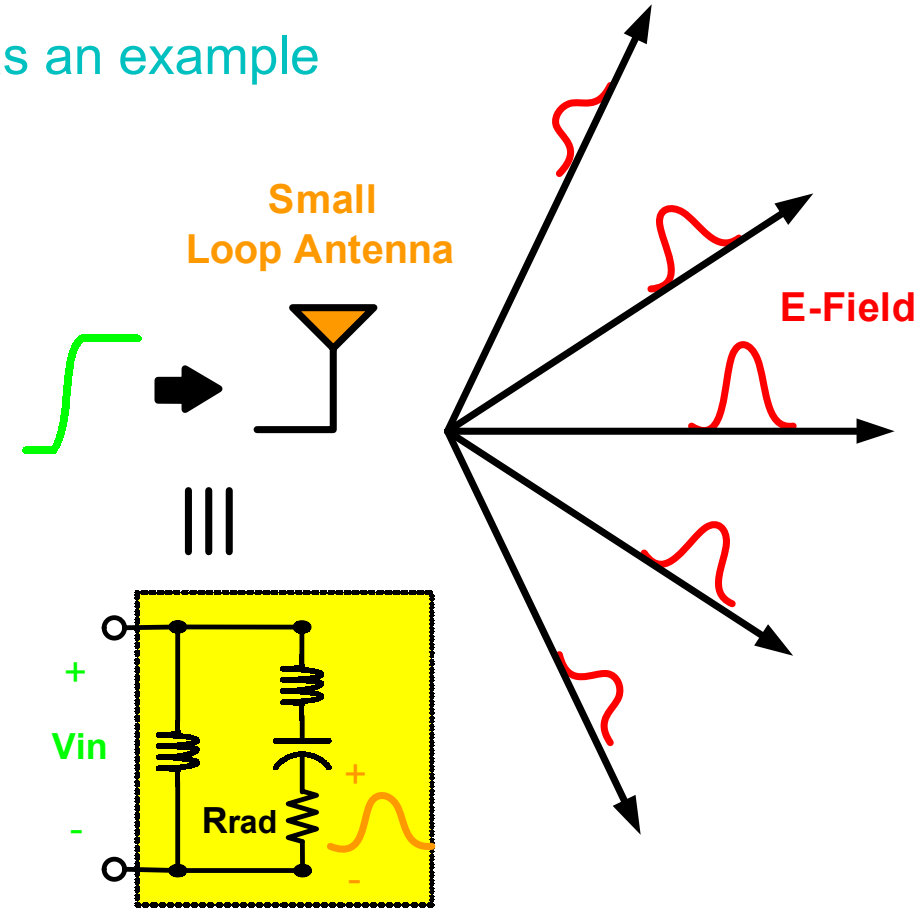

Pulse Reception

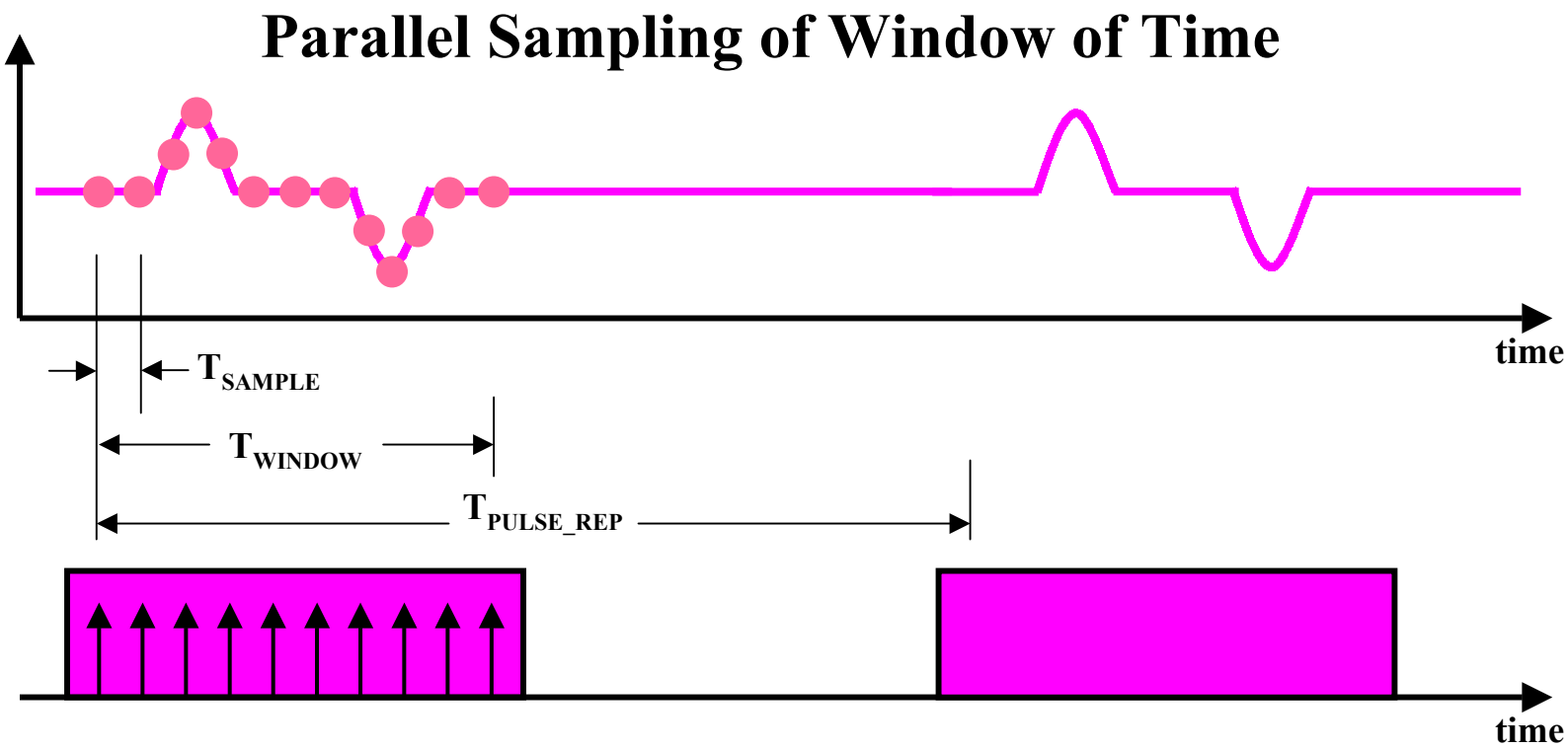

Three Clocking Timescales:

T_{SAMPLE} (<ns) T_{WINDOW} (~10's ns) T_{PULSE_REP} (~100's ns)

UWB Sampling and A/D

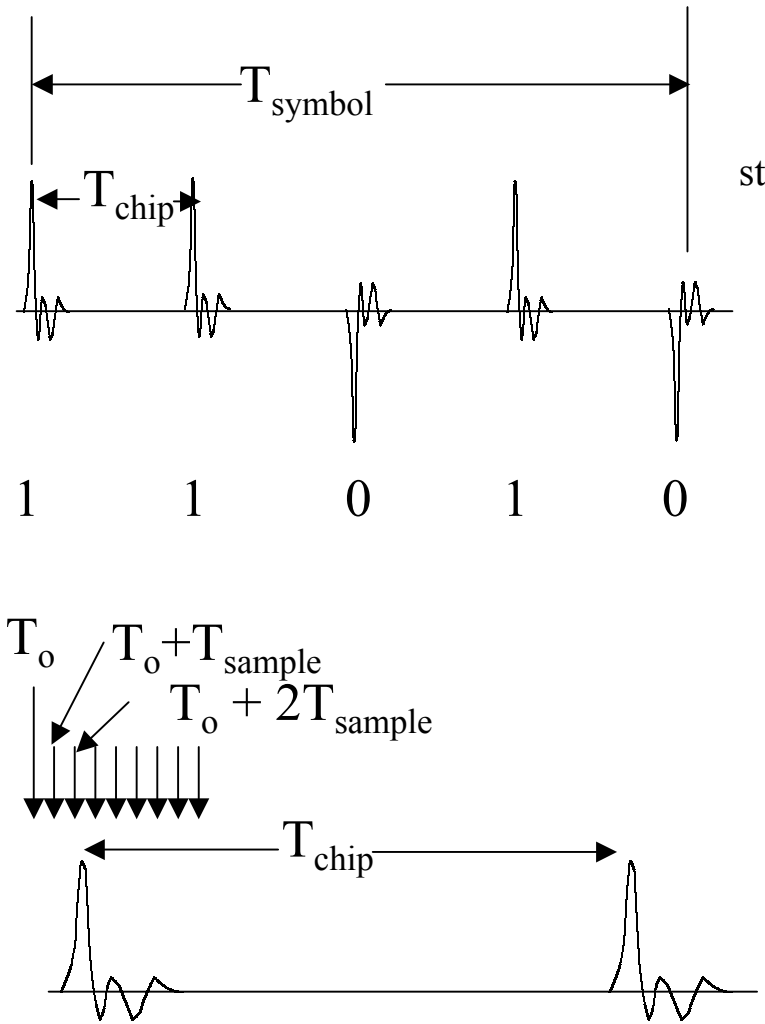

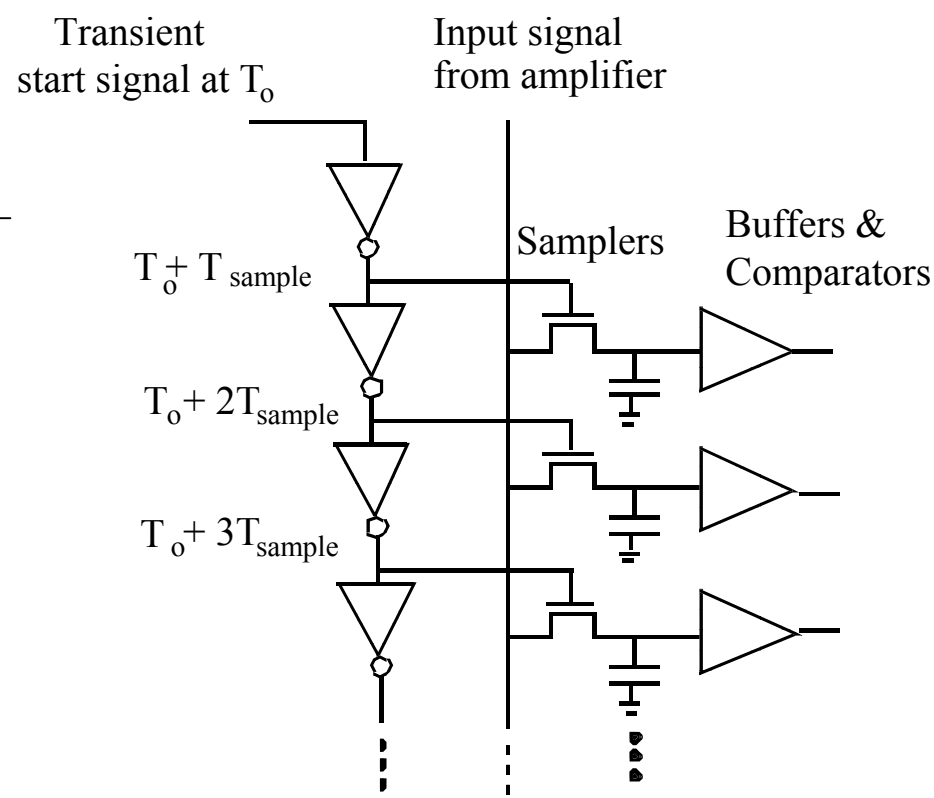

Oscillator Accuracy (Matching)

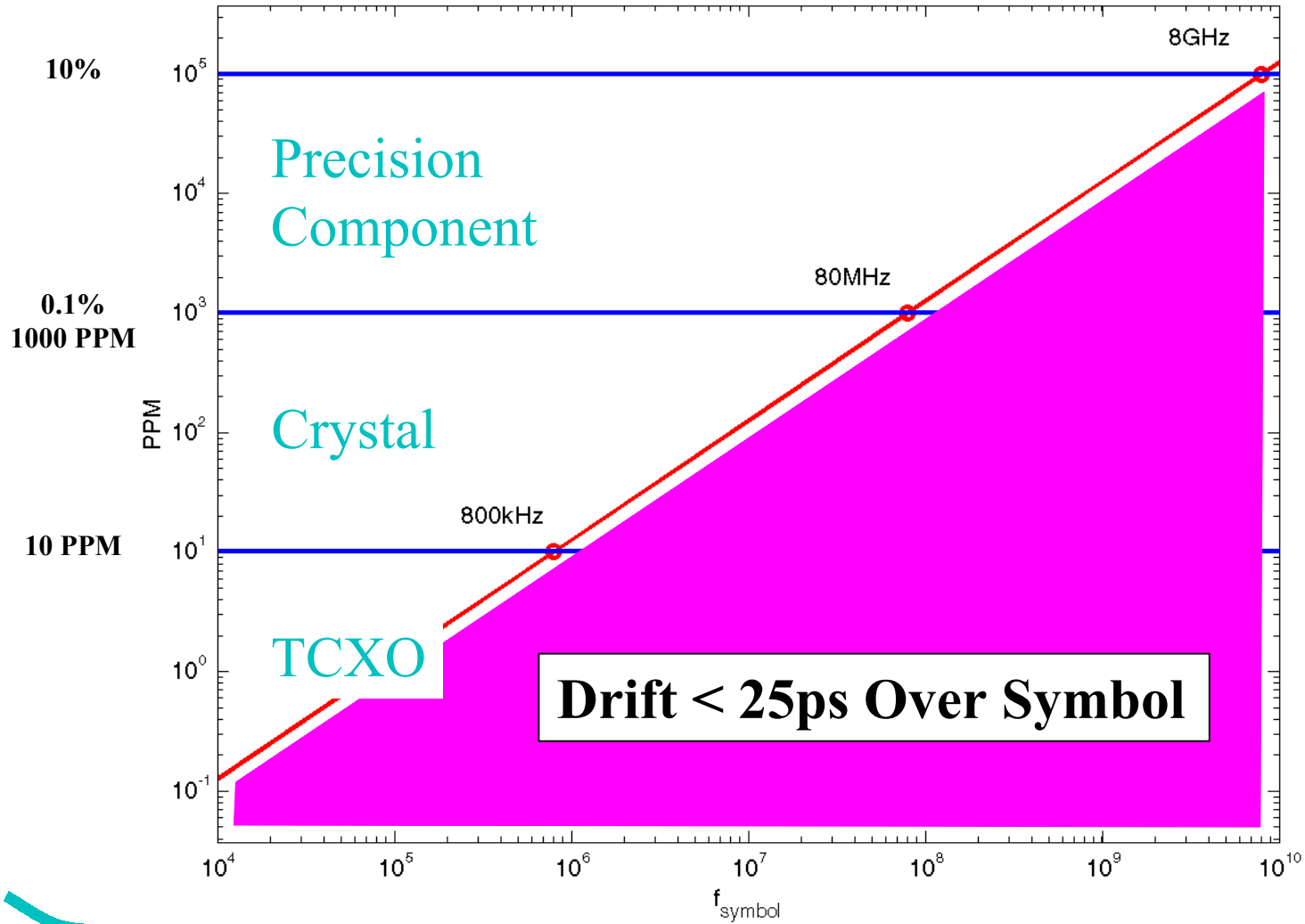

The received signal is dominated by interference (wide open front-end from .1-1GHz)

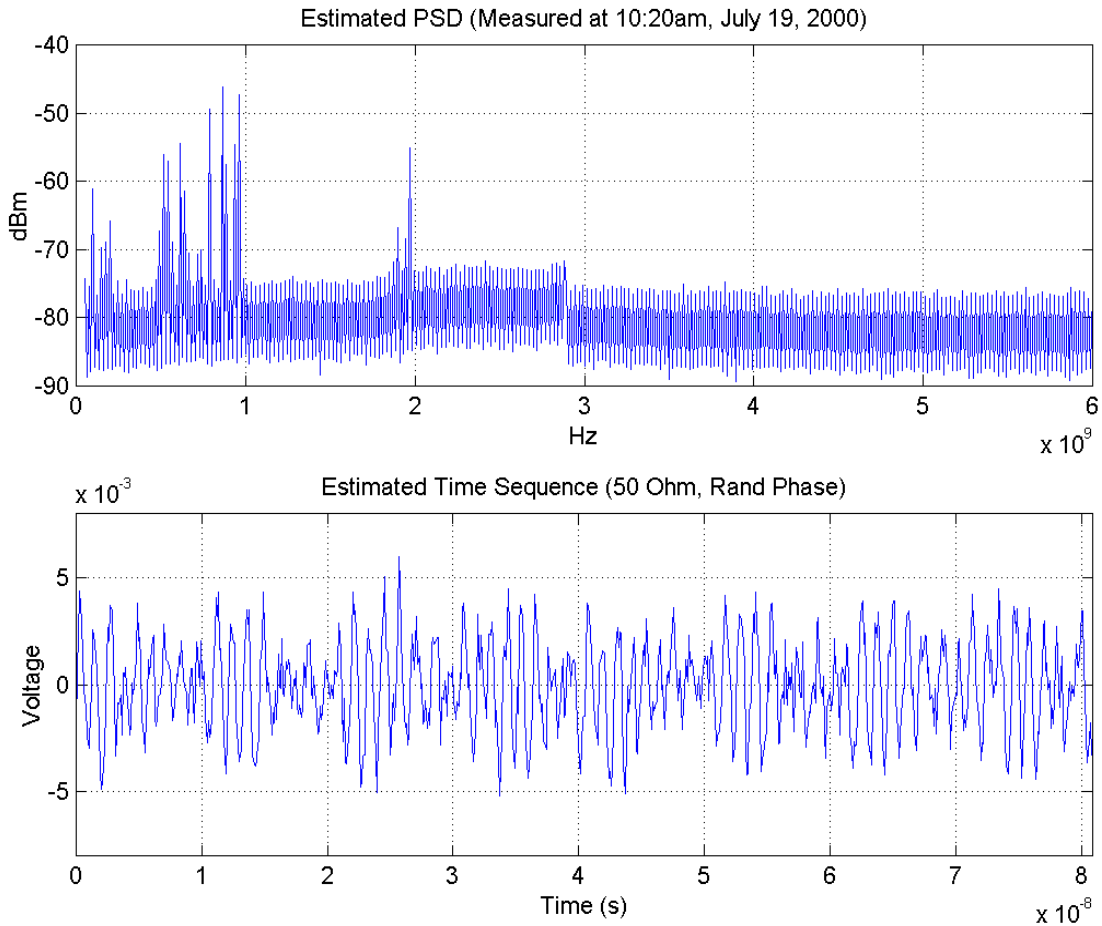

Interferers:

TV: 174-216MHz, 470-806MHz

ISM: 902-928MHz, 2.4-2.4835GHz, 5.725-5.850GHz

Cell phone:824-849MHz, 870-893MHz

Pager: 929-930MHz

PCS: 1.85-1.99GHz

Microwave Oven: 2.45GHz

Interference model determines A/D bitwidth

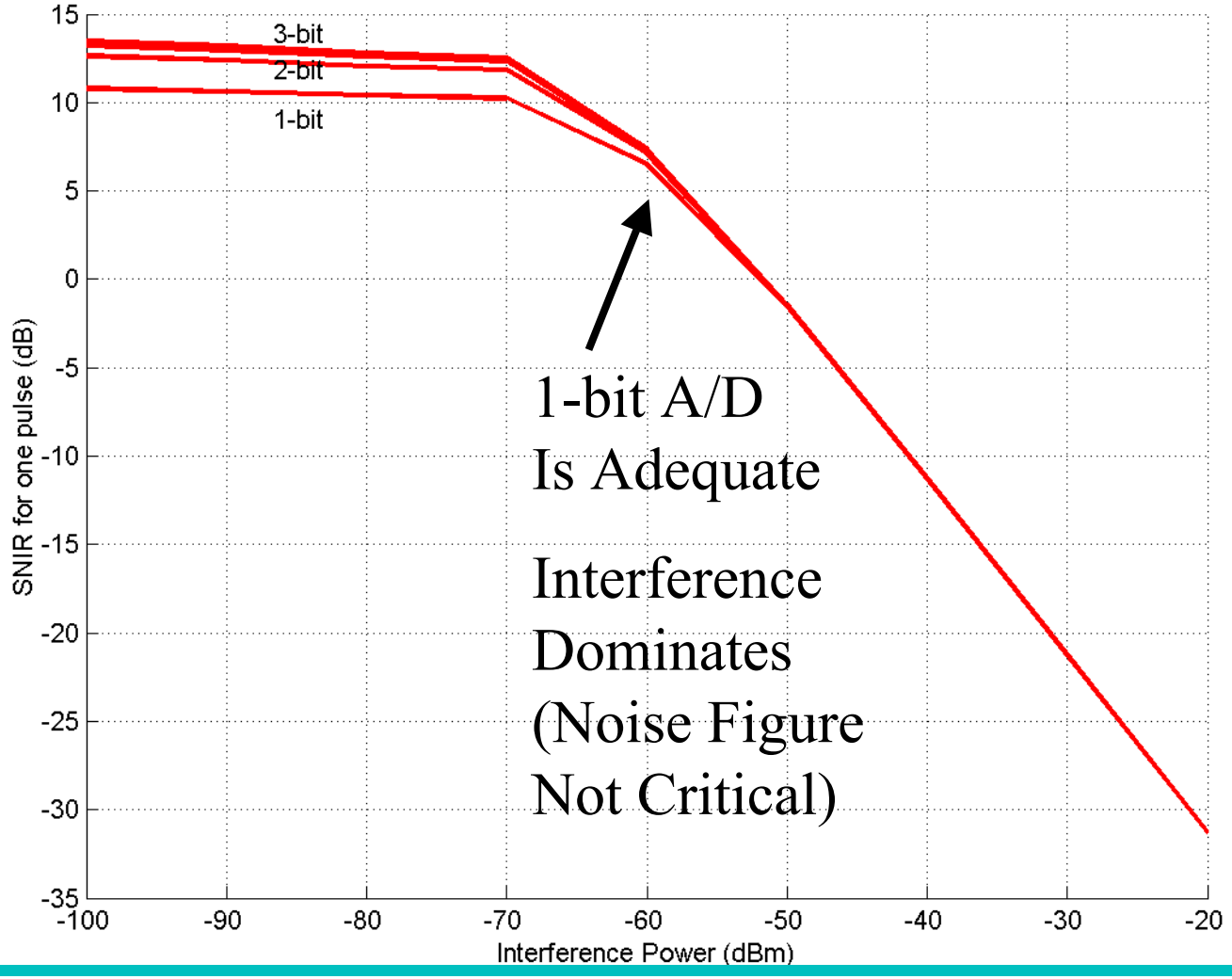

UWB Receive Baseband

Specs for Baseband

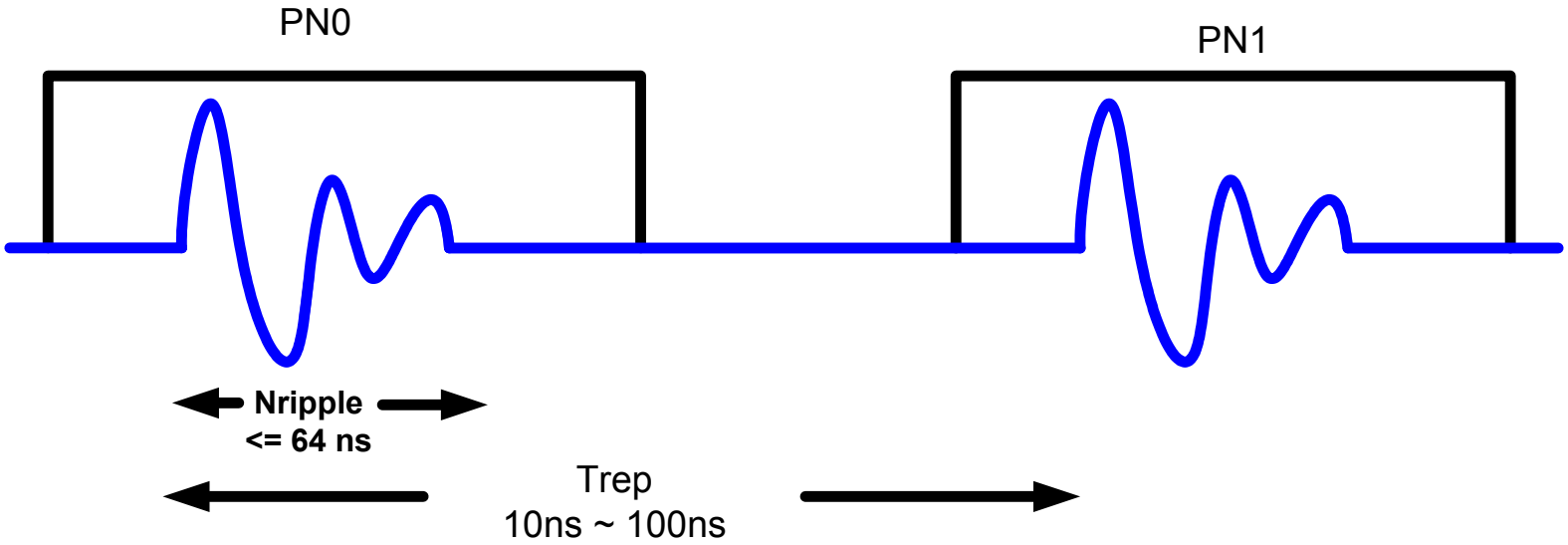

- Pulse Repetition Rate: 100kHz to 100 MHz
- Receive pulse match filter length ($N_{ripple}=N_{pulse}+N_{spread}$): < 64ns (128 samples)
- Sampling rate: 2 GHz
- PN length ranges from 1 to 1024 chips which correlates the output of the match filter

Processing gain – How much is needed?

Lets take as an input Echip/No of -11dB.

(1) Acquisition mode, ~400 chips is enough for suppressing the acquisition error below 1e-3.

Chips	Prob. of Miss lock	Prob. of False alarm	Eb/No @ output
300	0.0037	0.0041	14.4245 dB
400	0.86e-3	1.3e-3	15.6643 dB

(2) Data recovery mode, ~100 chips could achieve an uncoded bit error rate of 1e-3.

Chips	10	100	200
BER	0.1663	1.1e-3	2e-5

RX: Digital Backend

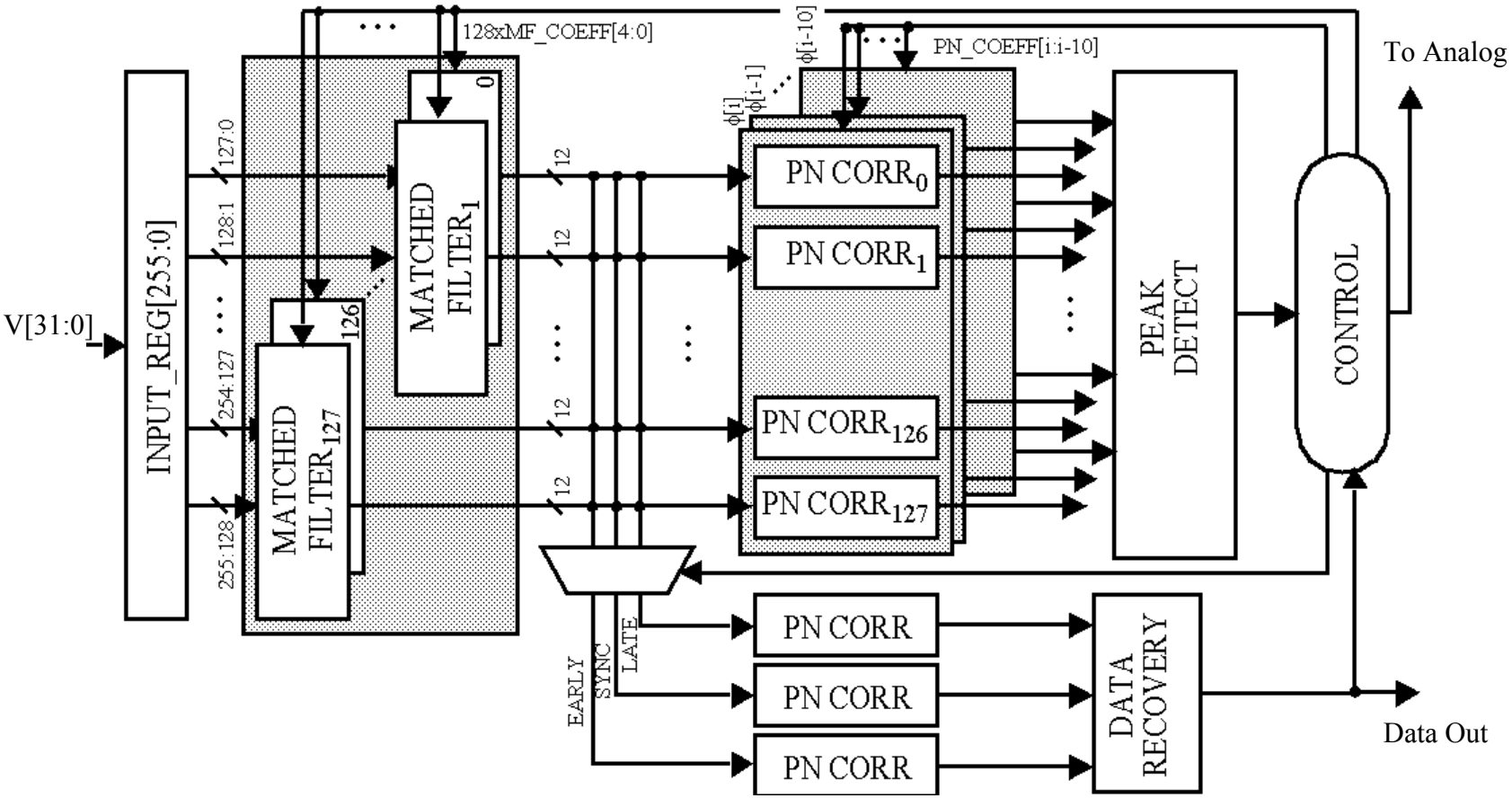

- Acquisition: 128-Tap Matched Filter x 128 x 11 PN Phases
- Synchronization: Early/On-Time/Late PN Phases

Chip design

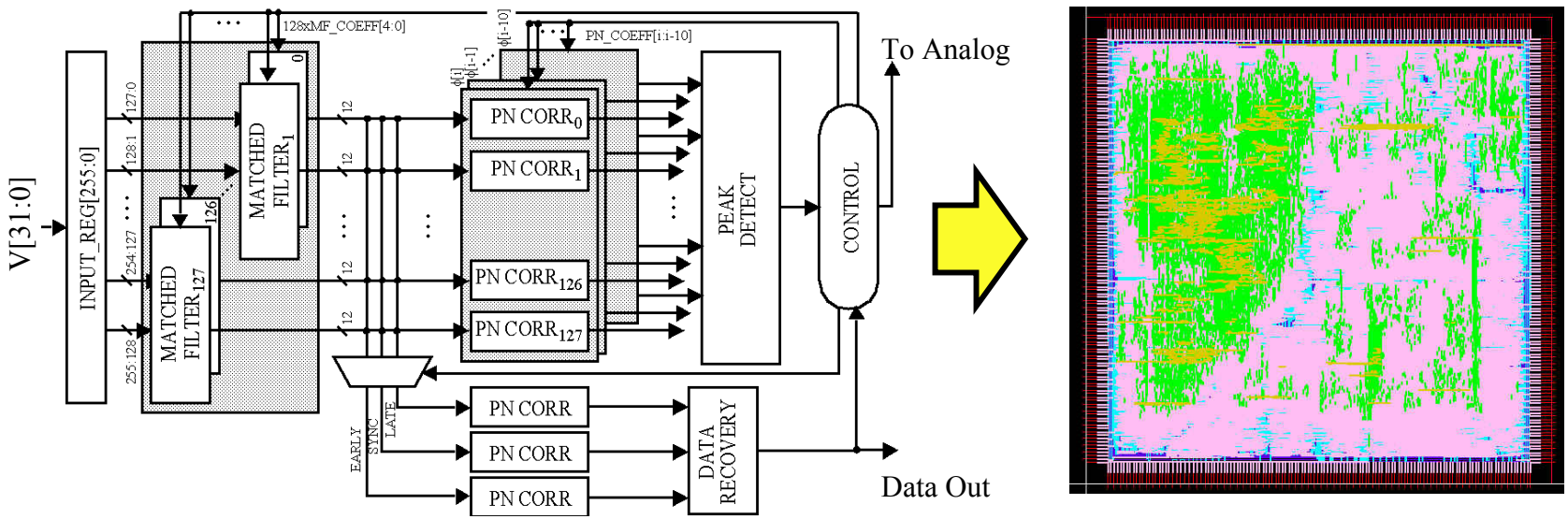

Process: 0.13um (ST Microelectronics)
Size: 3.3mm x 3.3mm; 245,000 Standard Cells

<u>Status:</u> In Place-and-Route Stage

Area and power estimation

Block	Area (mm^2)
Pulse Matched Filter (256 inputs, 128 outputs)	4.951512
PN Generator (max 1024 chips)	0.232100
Peak detector Block (128 inputs)	2.880800
Data Recovery (Track 3 samples)	0.068600
Control Logic (state flow)	<0.001
PN correlators (contain 128 correlators)	2.469600
Total	**10.614000**

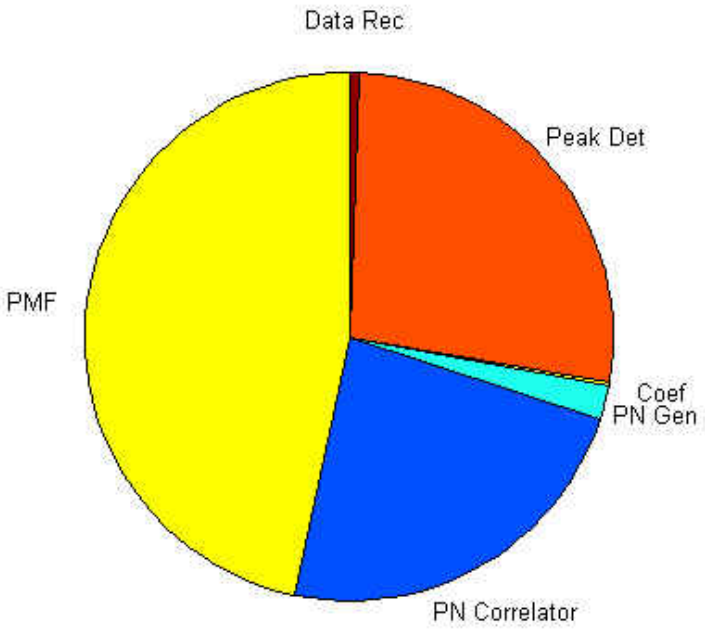

Pulse Transmitter

- Major advantage of impulse radios is the simplicity of the transmit chain – almost completely digital except for the final antenna driver…
- No need for linearity, just fast transitions

UWB Pulser/Antenna Co-design

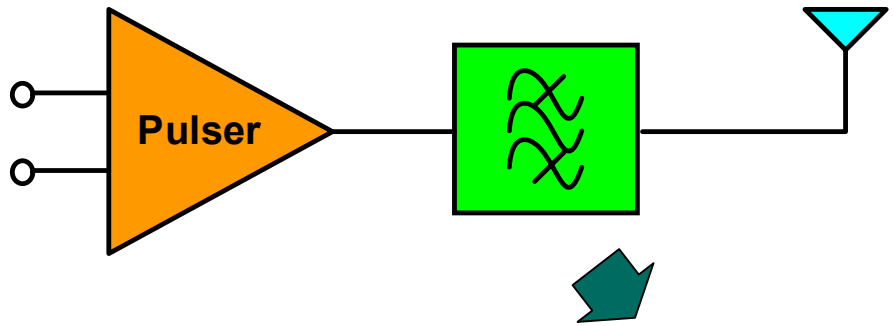

- Large Current Radiator (LCR) as the UWB antenna
- Notch filter for FCC radiation mask

- H-bridge pulser to drive inductive load
- Flexible driving force by parallel structure

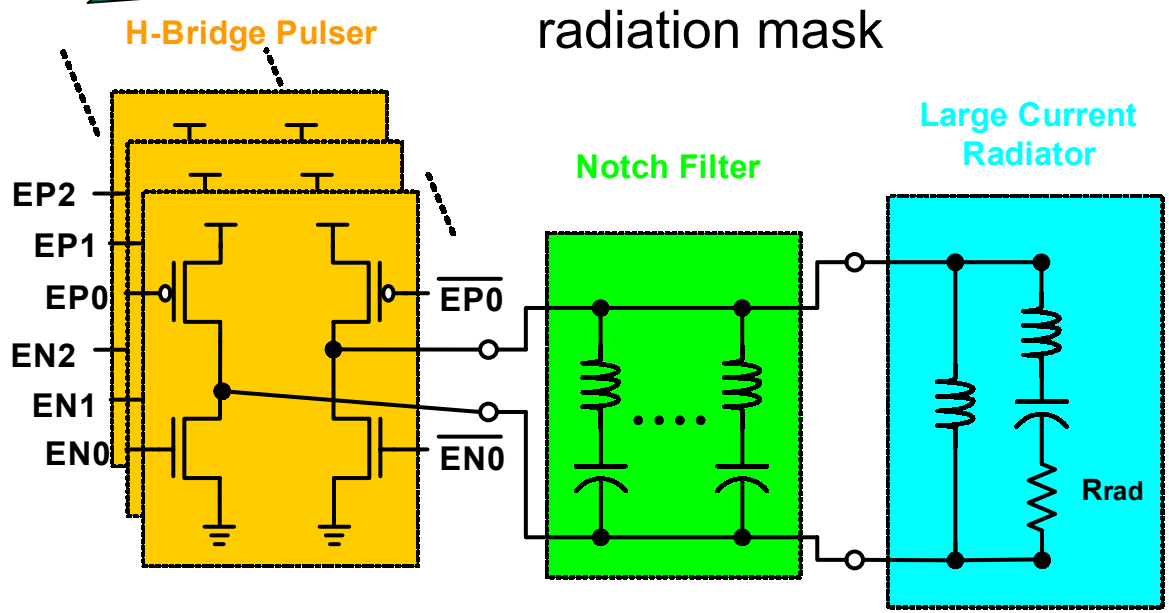

H-bridge Simulation Results

- Doublet is generated
- Pulse-width ~ 1nS
- Smoothed after low-pass filtering at the receiver

- Meet FCC's rule
- EIRP will increase when PRF(Pulse Repetition Freq) increases

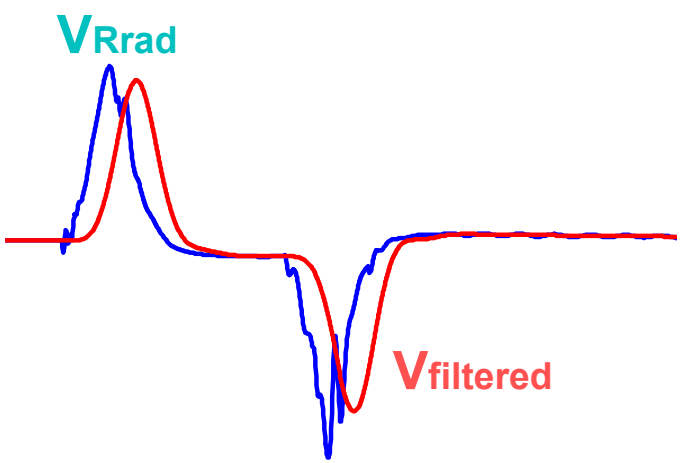

Time(ns)

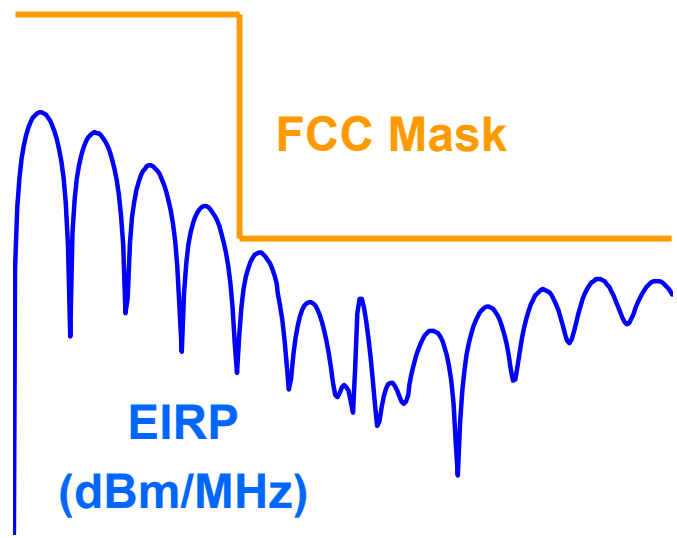

Frequency (GHz)

Driver Circuit Layout

- STMicroelectronics 0.13um CMOS process
- Chip area: 0.49mm^2
- 1.2V Vdd
- 2 drivers with enables -- Can either drive a monopole or dipole
- Each driver with 16 levels of driving capabilities

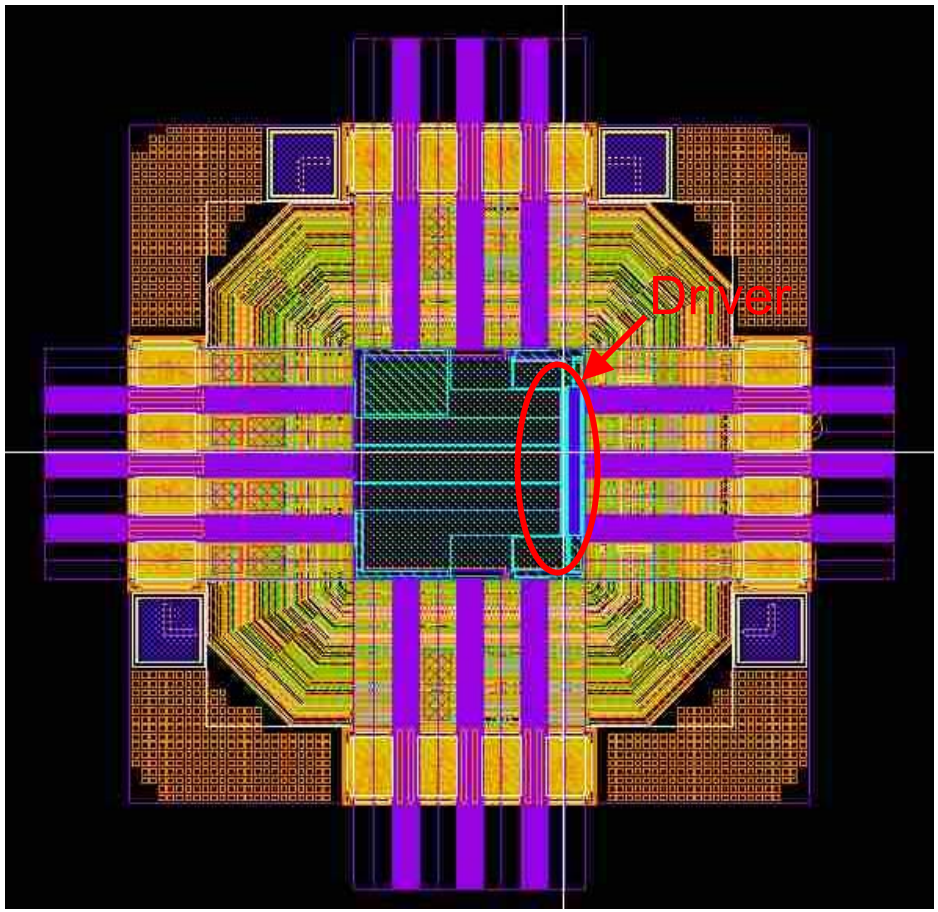

Status

- Chip tape out by summer in .13 micron technology
- Stay tuned at http://bwrc.eecs.berkeley.edu/Research/UWB/

19 GHz of Unlicensed Bandwidth!

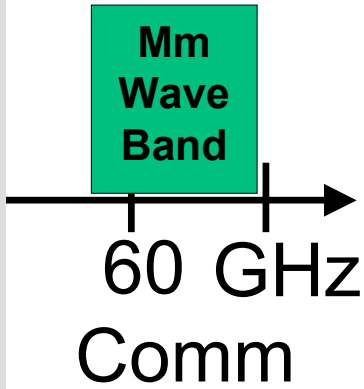

- The 57-64 GHz band can transmit up to .5 Watt with little else constrained
- How can we use these new resources?

60 GHz Research Team

Gary Baldwin, Bob Brodersen, Ali Niknejad

CMOS:

- Chinh Doan — LNA/PA, T-Lines
- Brian Limketkai — VCO, Phase Noise
- Sohrab Emami — Actives, Mixer
- Hanching Fuh — PA
- Eddie Ng — Freq. Dividers
- Sayf Alalusi — Antenna Array/FE Filters

SiGe:

- Eddie Ng — LNA, Freq Dividers
- Mounir Bohsali — Mixers
- Patrick McElwee — PA

60 GHz Unlicensed Allocation (1998)

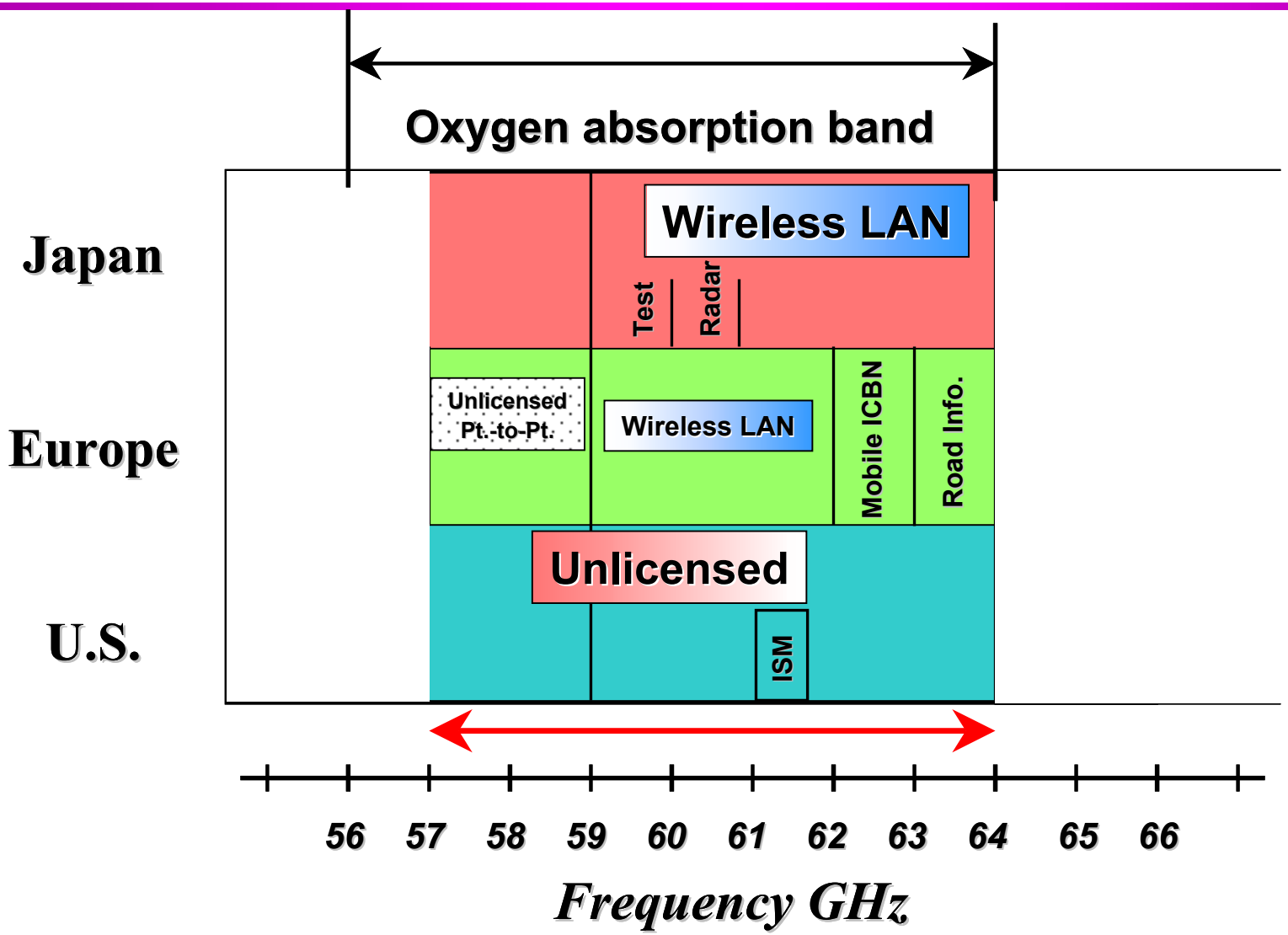

Why Isn't 60 GHz in Widespread Use?

- Oxygen absorbs RF energy at 60 GHz
- The technology to process signals at 60 GHz is very expensive
- The signal radiated is attenuated by the small antenna size – i.e. the power received at 60 Ghz from a half wave dipole is 20 dB less than at 5GHz.

Oxygen attenuation

The oxygen attenuation is about 15 dB/km, so for most of the applications this is not a significant component of loss

For long range outdoor links, worst case rain conditions are actually a bigger issue

The technology to process signals at 60 GHz is very expensive

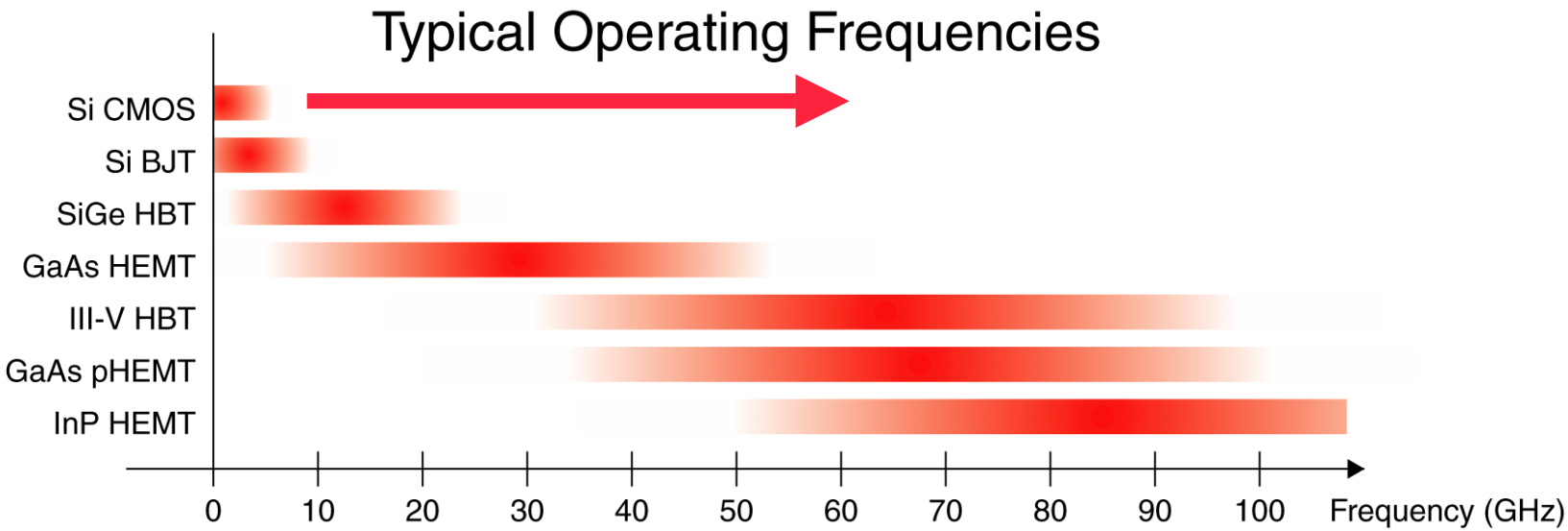

Yes, it has been expensive, but can we do it in standard CMOS?

Importance of Modeling at 60 GHz

- Transistors
  - » Compact model not verified near f_{max}/f_t
  - » Table-based model lacks flexibility
  - » All parasitics are more critical
  - » Highly layout dependent
- Passives
  - » Need accurate reactances
  - » Loss not negligible
  - » Scalable models desired
  - » Substrate effects must be carefully modeled

60 GHz Test Chips

- December 2001 CMOS
  - SOLT De-embedding
  - NMOS transistors
  - 0.15μm/0.13μm to 5.0μm/5.0μm
  - Long high-speed multi-finger NMOS devices
  - Diodes
  - Inductors
- February 2002 CMOS
  - SOLT De-embedding
  - High-speed PMOS devices
  - DC measurement structures for NMOS/PMOS
  - Coplanar transmission lines
  - T-line impedance matching networks
  - Low-noise amplifier
  - Oscillator
- July 2002 SiGe
  - 30 GHz to 5 GHz Mixer
  - 55 GHz Oscillator
  - 28 GHz LNA
  - 60 GHz 50Ω Output Buffer
  - Flip-flop divider, Injection-Locked Divider
  - Caps, Inds, BJTs, T-lines
- September 2002 CMOS
  - TRL de-embedding
  - Transformers, Inductors
  - Power transistors
  - Finger capacitors
  - Optimized NMOS transistors
  - Coplanar and Microstrip Lines
- December 2002 CMOS
  - Coplanar and Microstrip Lines
  - Bypass and coupling caps
  - Distributed Filter
  - Amplifiers
  - Oscillators

Active CMOS Device CMOS Modeling

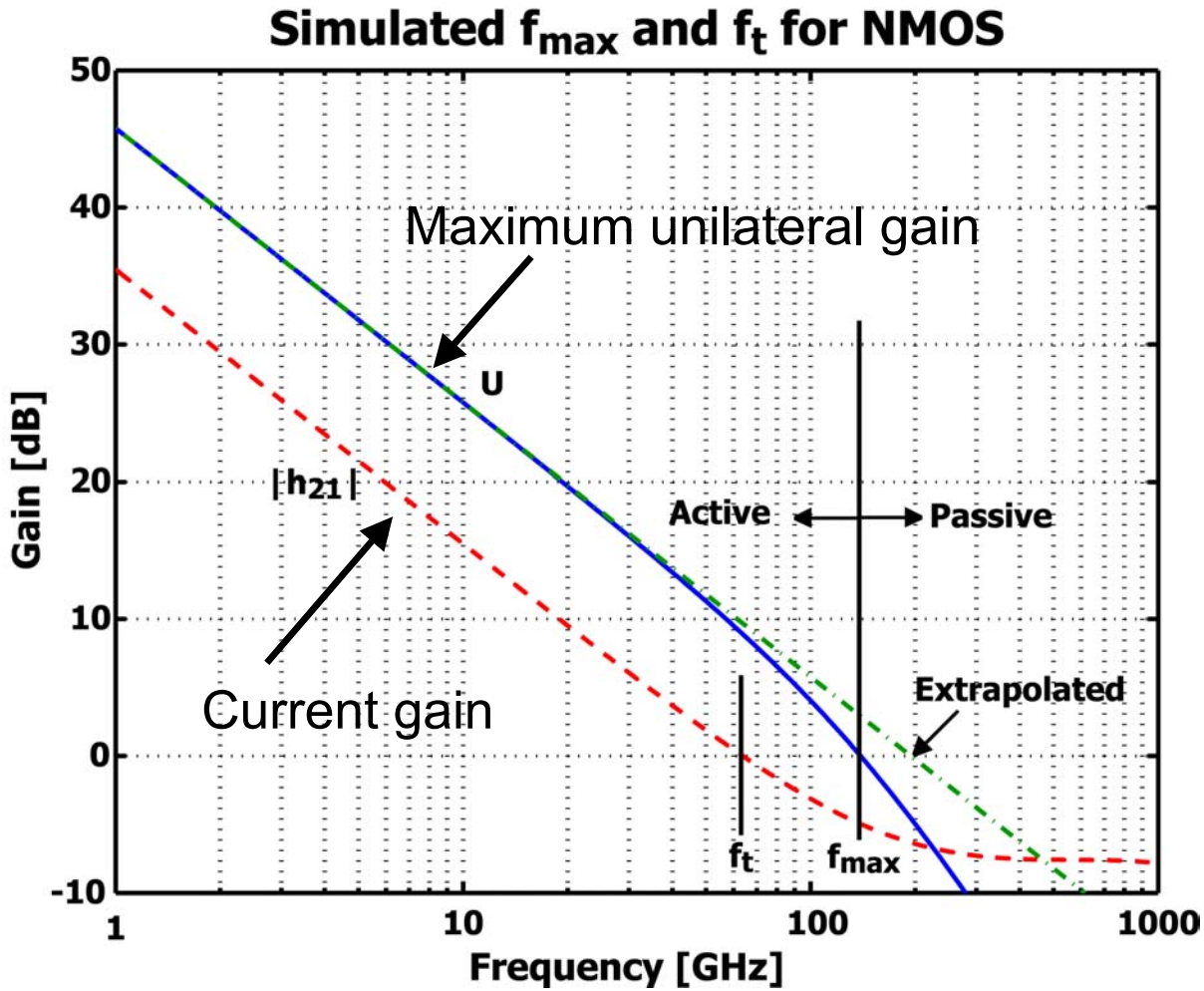

The real f_{max} is the important number to look at

130 nm CMOS device

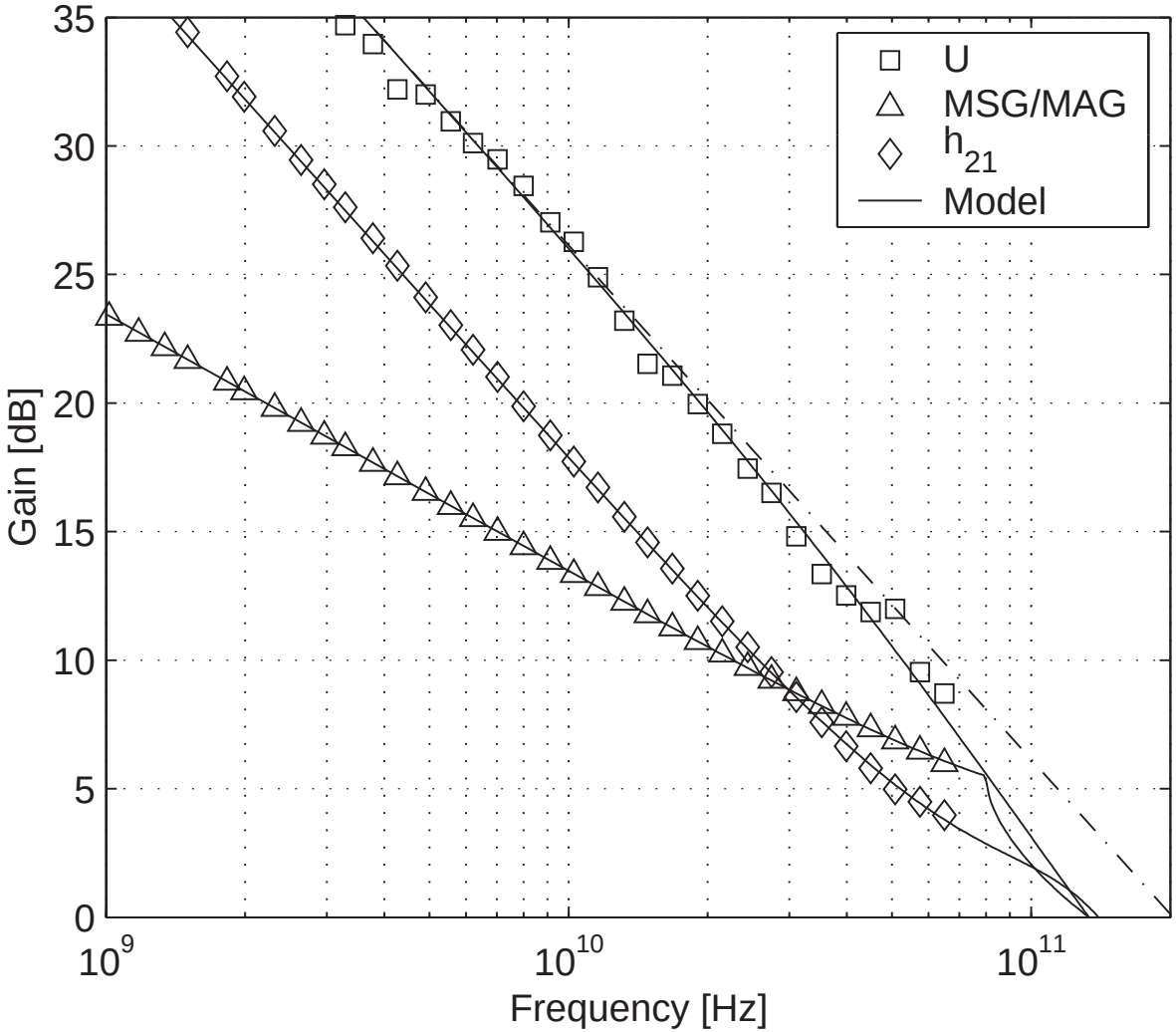

6-8 dB gain at 60 GHz!

Modern CMOS Process - Modeling Challenges

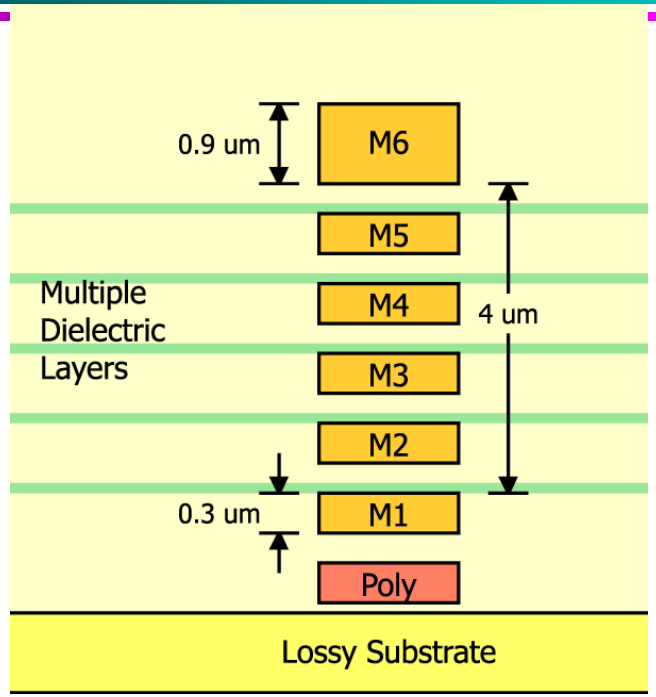

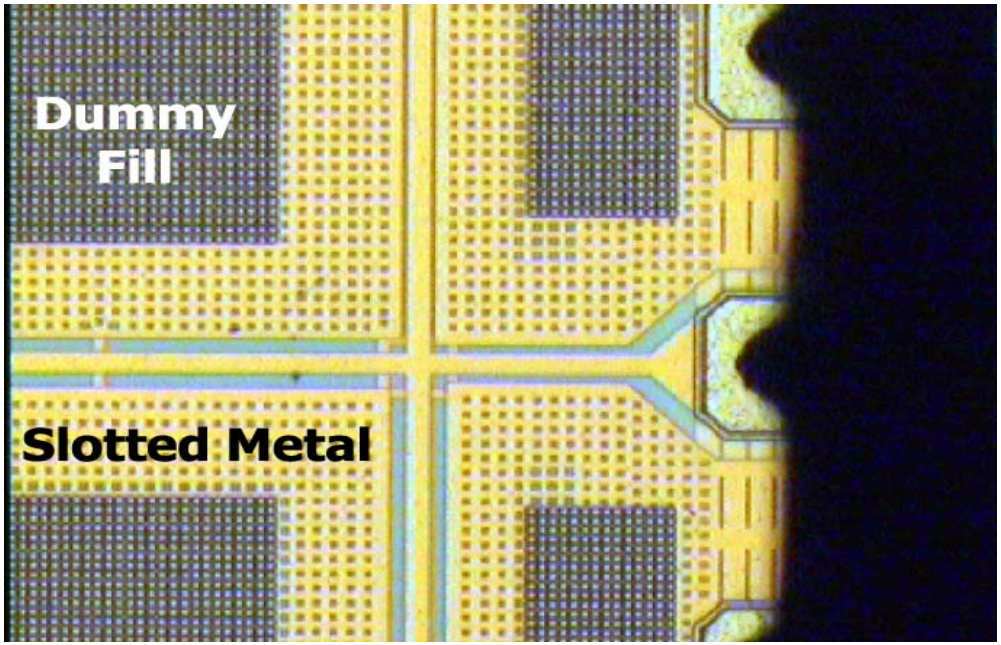

- Lossy substrate (~10 Ω-cm)
- 6–8 metal levels (copper)
- Chemical mechanical planarization (20-80% metal density)
  - » Slots required in metal lines
  - » Fill metal in empty areas
- Multiple dielectric layers

CMOS Model at Microwave Frequencies

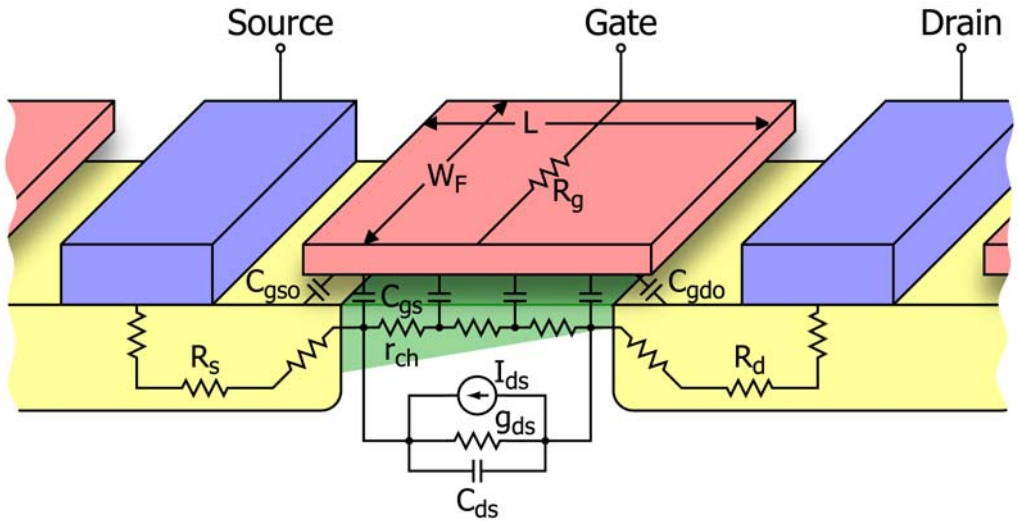

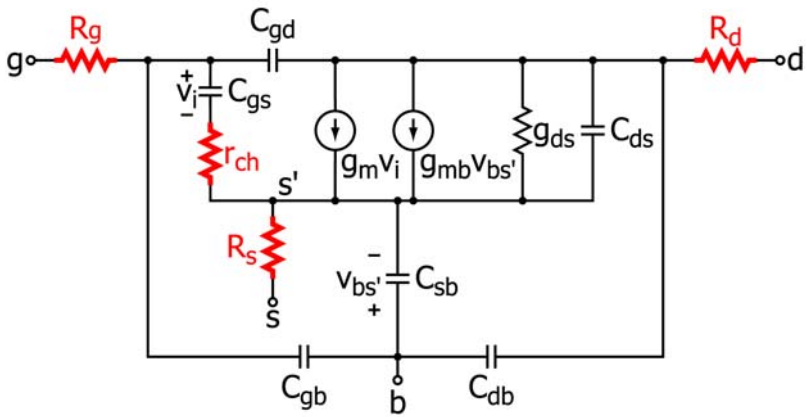

$$f_t \approx \frac{g_m}{2\pi C_{gg}}$$

$$f_{max} \approx \frac{f_t}{2\sqrt{R_g(g_m C_{gd}/C_{gg}) + (R_g + r_{ch} + R_s)\, g_{ds}}}$$

Key design parameter is gate width…

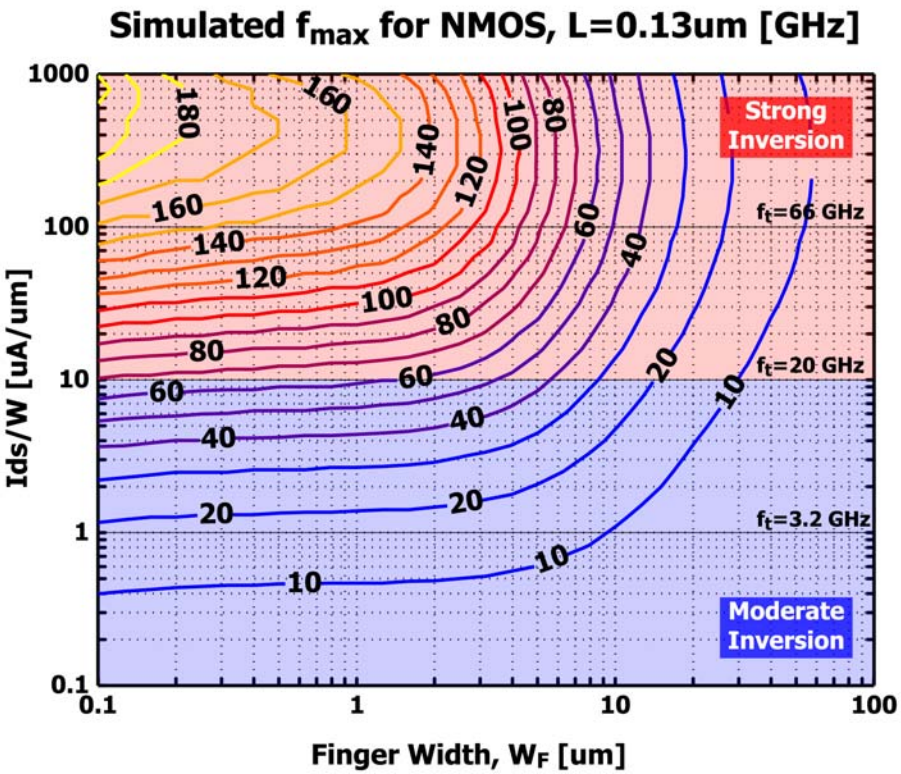

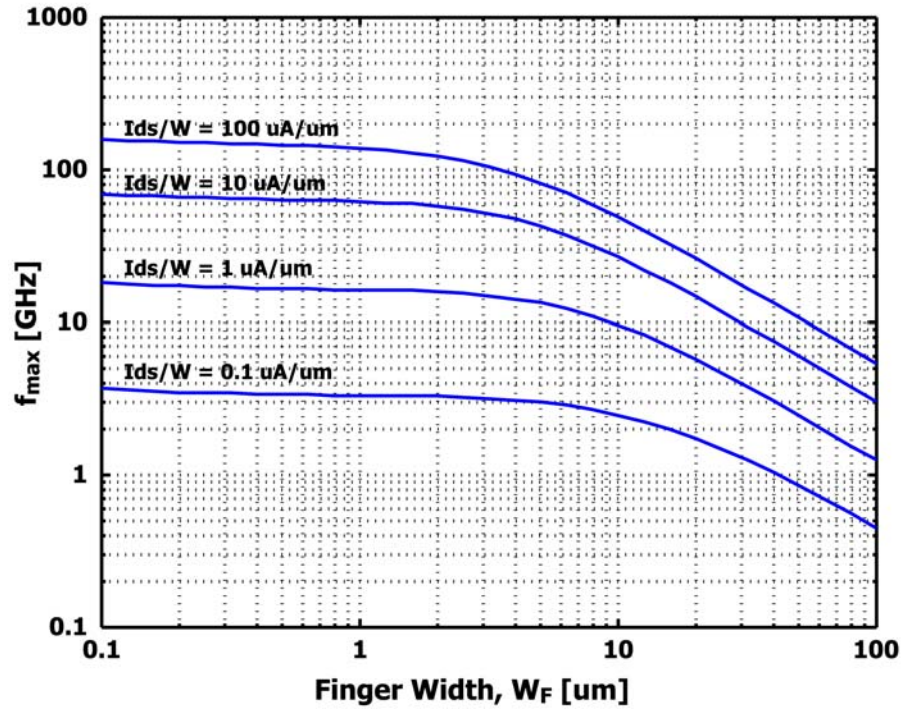

- If the device is designed correctly and enough current is used, with .13 micron f_{max} can easily surpass 100 GHz
- Phillips reported 150 GHz f_{max} in .18 micron technology

Example Issue: CPW vs. Microstrip

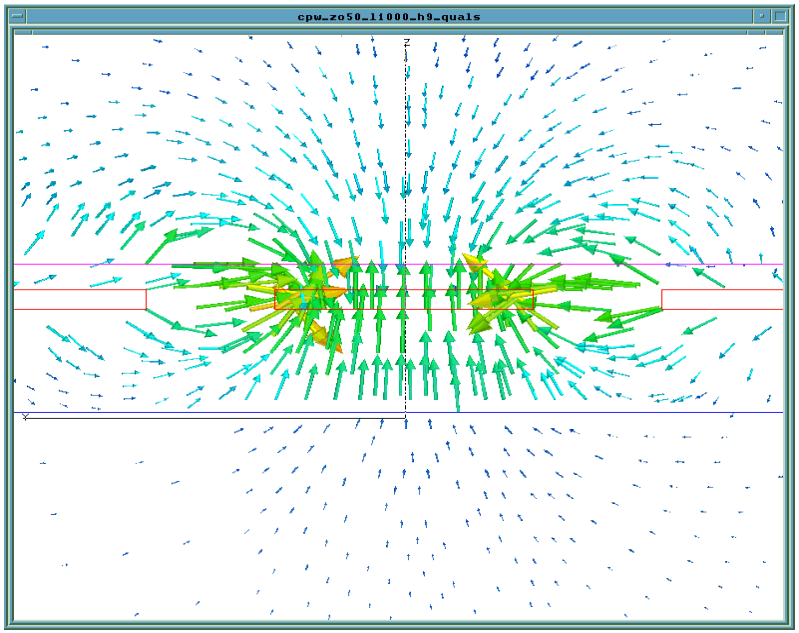

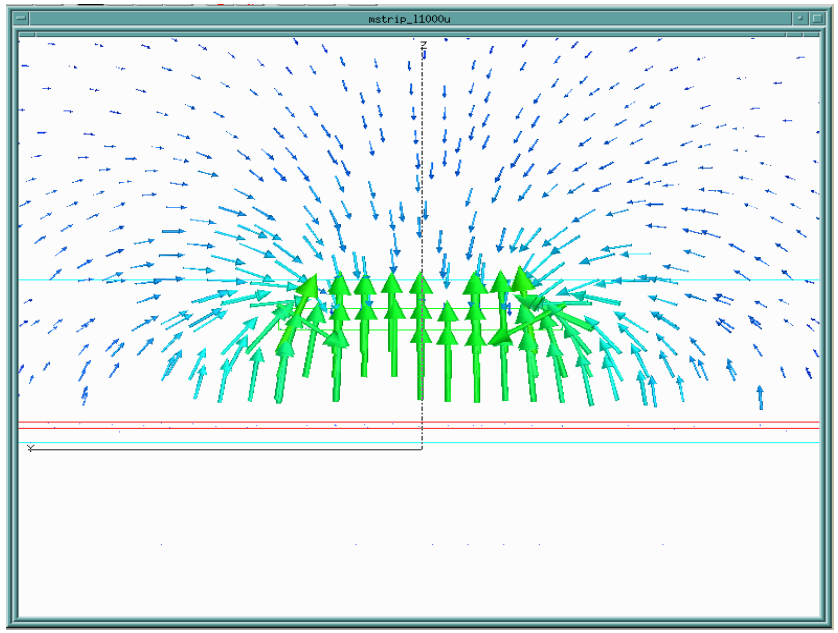

- Small coupling to substrate
- High-Z_0 lines
- Q of inductive line ~ 20
- Q of capacitive line ~ 15
- Metal underpass to suppress odd-mode propagation

- Negligible coupling to substrate
- Low-Z_0 lines
- Q of inductive line ~ 12
- Q of capacitive line ~ 25

CPW Filters

- Generate electrical models
- Optimize over **line lengths** in ADS
- Layout, import, and simulate in HFSS

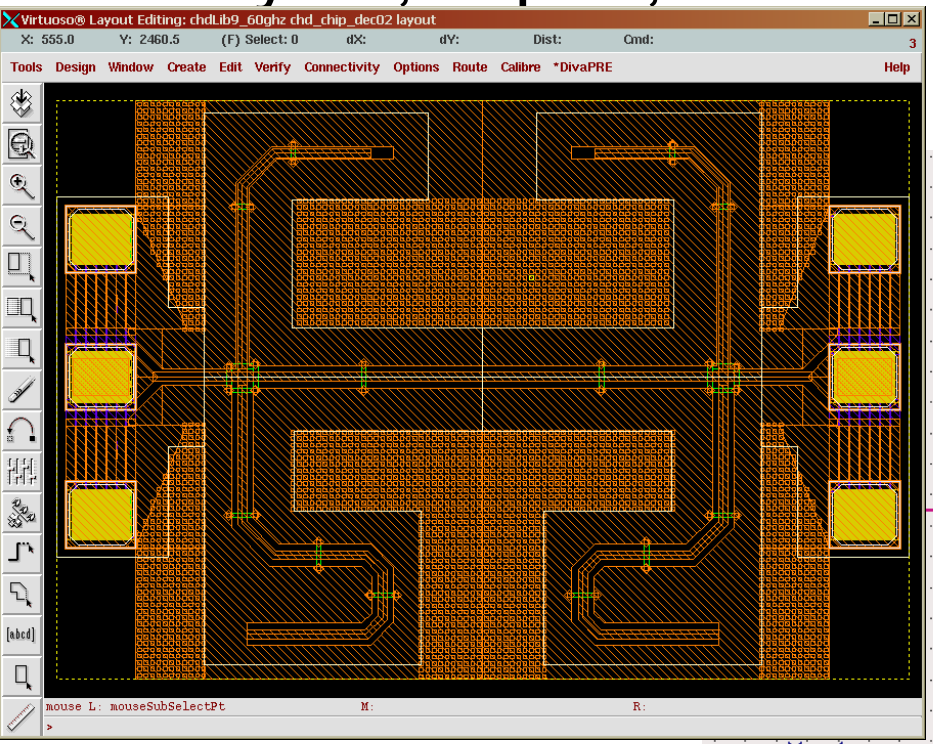

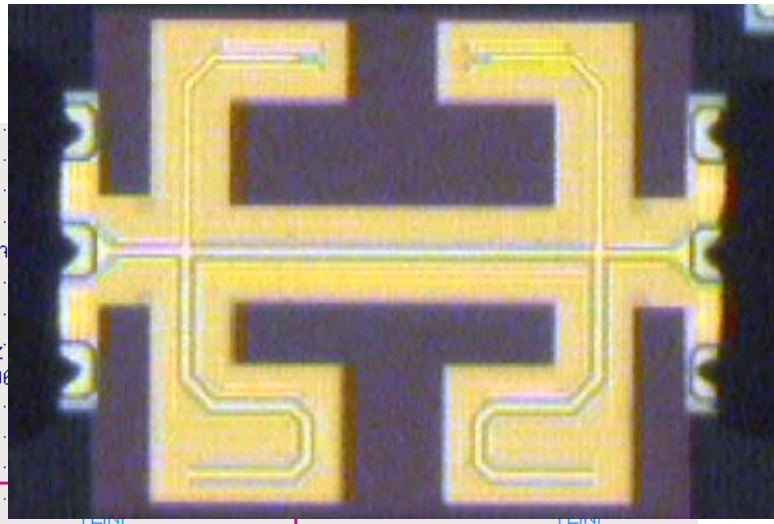

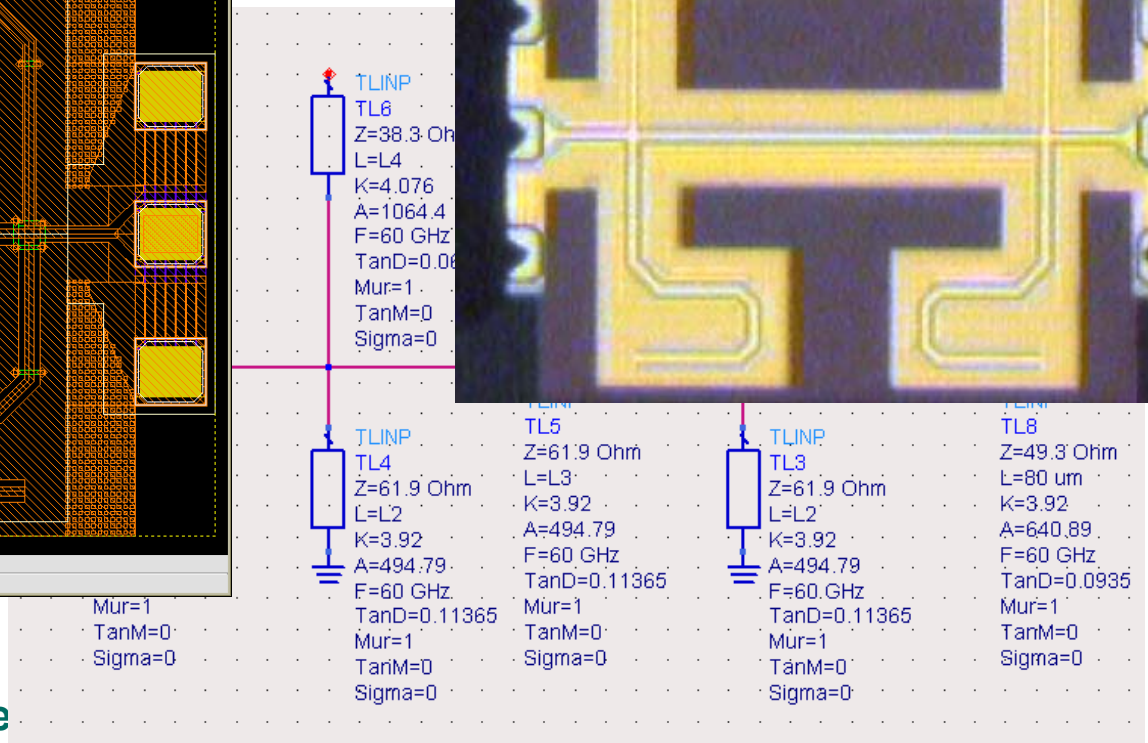

Filter Measurements vs. Simulations

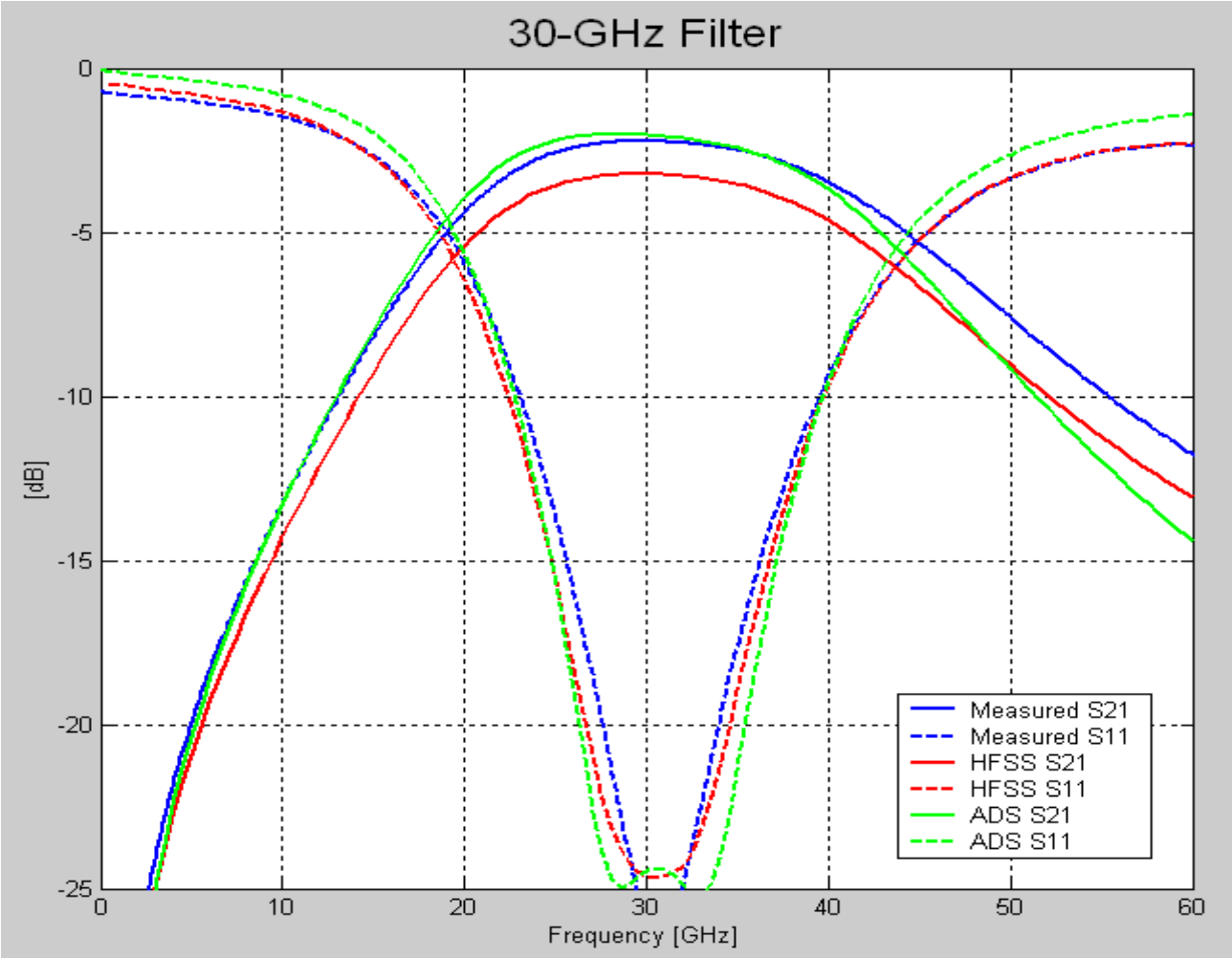

Now that we know CMOS can do it: The open question is…

- What is the best way to use 5 GHz of bandwidth to implement a high datarate link?
  - » Extremely inefficient modulation but at a very high rate? (say 2 GHz of bandwidth for 1 Gigabit/sec) – requires analog processing
  - » Or use an efficient modulation, so lower bandwidth. e.g. OFDM – but needs digital processing and a fast A/D

60 GHz Radio Frequency Planning

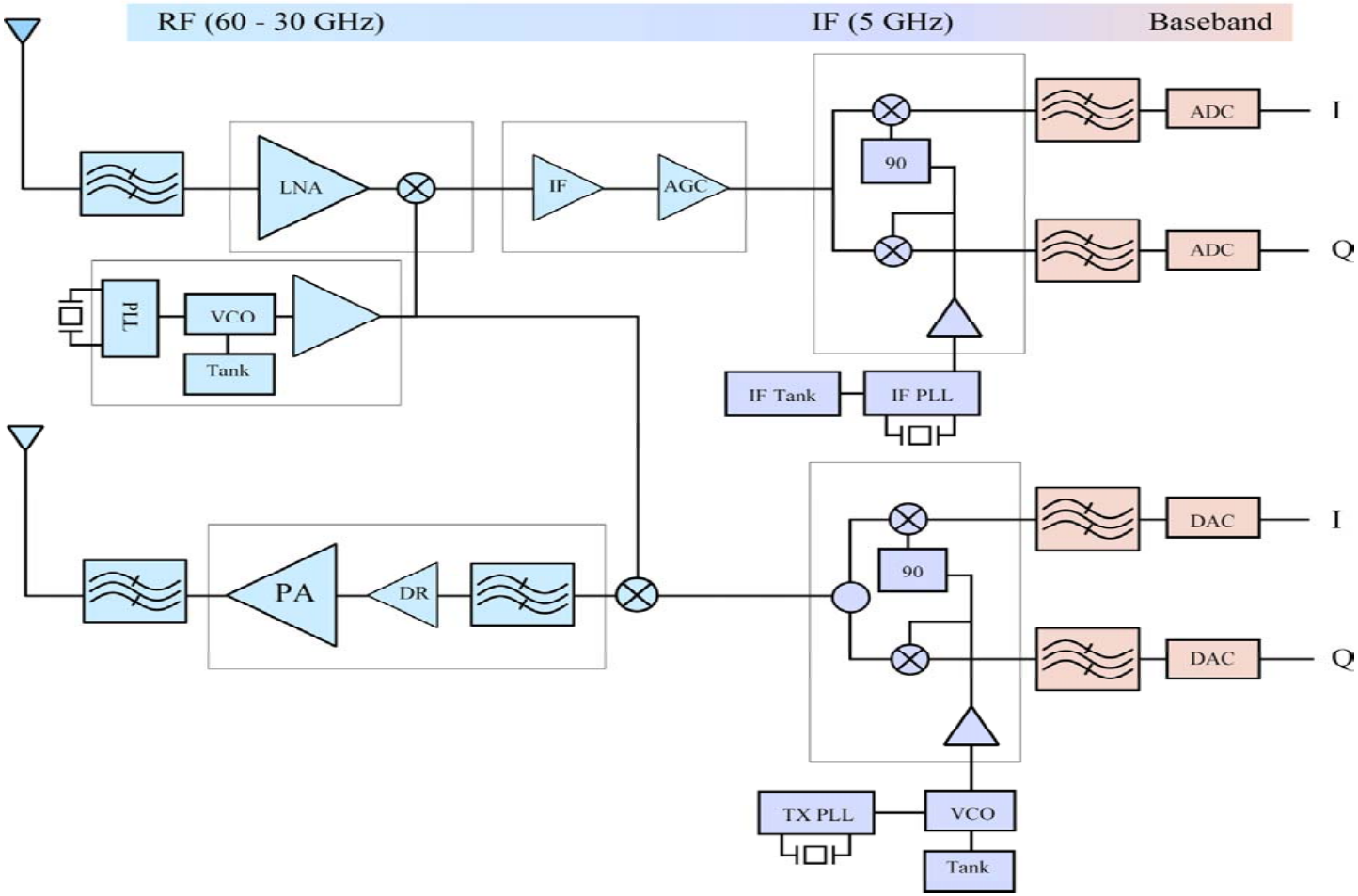

Use 5 GHz as an IF frequency

60 GHz Antenna Array Receiver

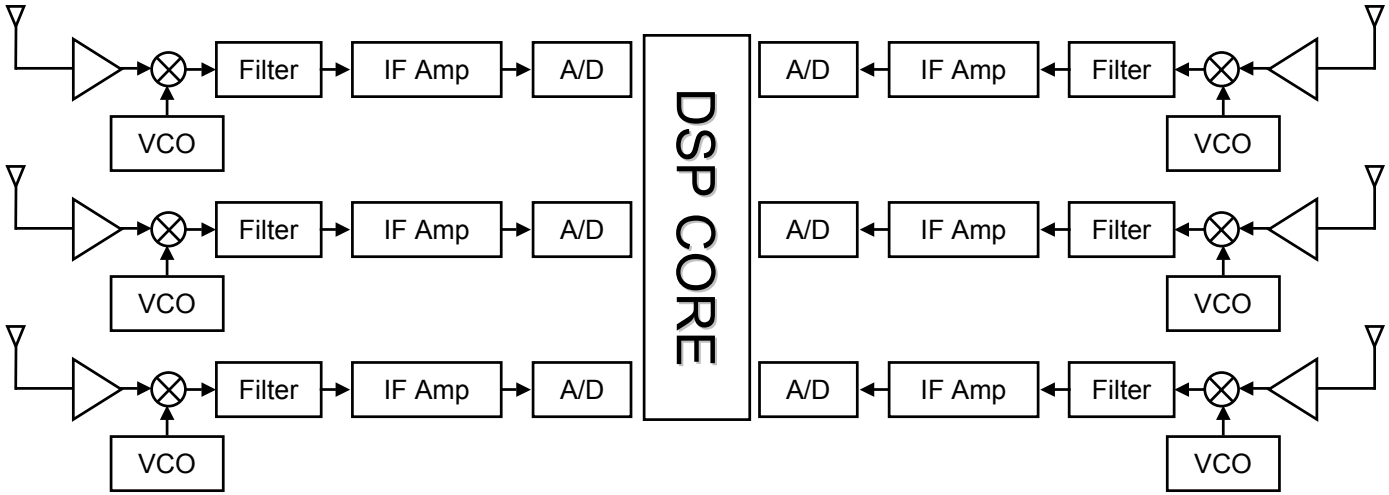

- Antenna elements are small enough to allow direct integration into package or large numbers in an array
- Spatial diversity offers resilience to multi-path fading
- Beam forming provides high antenna gain
- Higher the frequency the better!

Conclusions

- UWB radios provide a new way to utilize the spectrum and there is a wide variety of unique applications of this technology

However, it takes a completely new kind of radio design…

- At the present state of technology CMOS is able to exploit the unlicensed 60 GHz band

However, what kinds of systems should be built with all this bandwidth

There is 19 GHz of bandwidth ready to be used for those willing to try something new!