Layout Techniques for Enhancing Yield in Monolithic Analog Circuits

Dr. Randall Geiger

Department of Electrical and Computer Engineering
Iowa State University

Outline

- Background
- Goal
- Yield enhanced layout strategies
  - Negative feedback amplifiers
  - R-2R ladders
  - R-string DACs
- Contact resistance modeling
- Conclusions

Background

- Observations
  - Layout styles for ratio-matched components often based upon using a number of unit cells that corresponds to the desired component ratio. This represent a component-ratio based area allocation strategy
  - For a given total area, the component-ratio based area allocation schemes often result in a substantial sub-optimal yield

Background

Component-ratio based area allocation

- Negative feedback amplifier

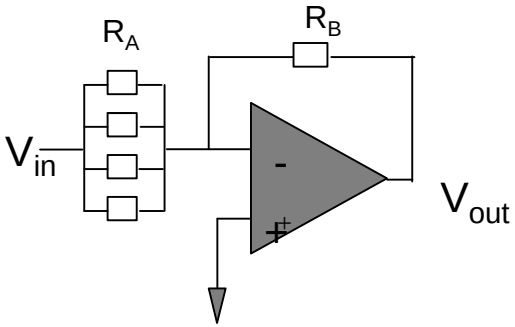

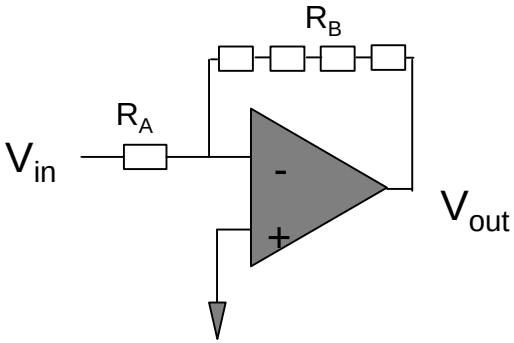

- Area ratio=component ratio
- For a fixed total resistor area , yield is substantially below optimal

Background

Equal-area based area allocation

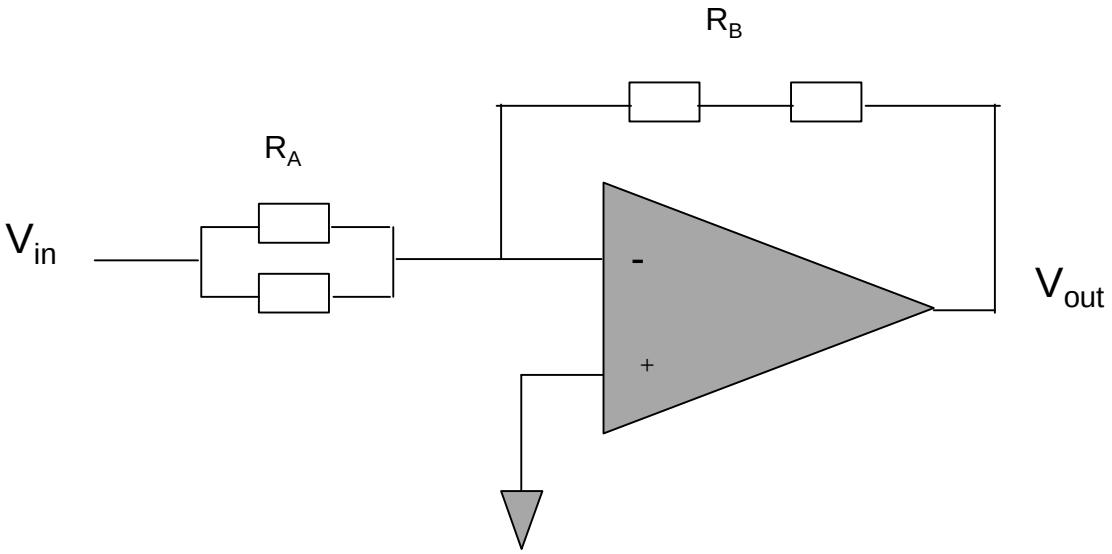

For fixed total area of “gain of 4” amplifier

$$Yield_{EAB} > Yield_{CRB}$$

It may not be trivial to obtain equal area for some gains

Background

Component-ratio based area allocation

- R-2R ladders

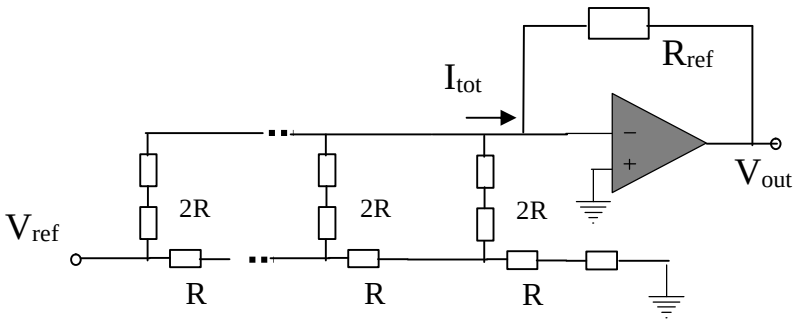

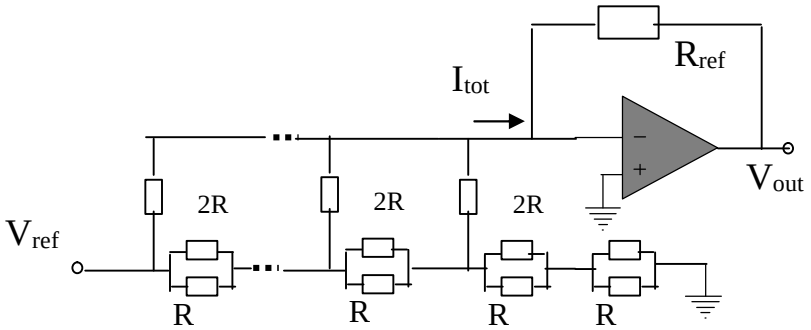

- Area for “2R” resistor is double or half of that of the “R”resistor
- Area for MSB slices is same as area for LSB slices
- For a fixed total resistor area , yield is substantially below optimal

Outline

- Background
- Goal
- Yield enhanced layout strategies
  - Negative feedback amplifiers
  - R-2R ladders
  - R-string DACs
- Contact resistance modeling
- Conclusions

Goal

Develop area allocation strategy to optimize yield of ratio-critical circuits

- Feedback amplifiers
- R-2R ladders
- R-strings

Will consider only random variations in sheet resistance and contact resistance. Sufficient partitioning must be utilized so that gradient effects can be maintained at a sufficiently low level through appropriate layout techniques such as centroiding.

Outline

- Background
- Goal
- Yield enhanced layout strategies
  - Negative feedback amplifiers
  - R-2R ladders
  - R-string DACs
- Contact resistance modeling
- Conclusions

Yield enhanced layout strategies
Feedback amplifiers

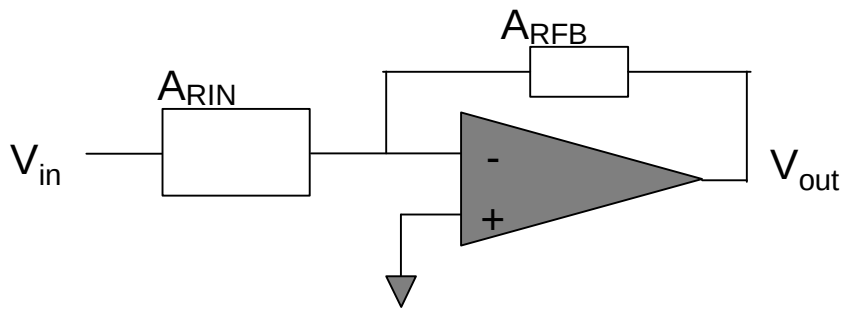

<u>Theorem:</u>

If only random effects are present in the resistors, the yield will be maximized for a given total area if $A_{RFB}=A_{RIN}$

Note: This area allocation is independent of the gain

Note: Unit cell with segmentation can be used to obtain nearly optimal area allocation for any gain

Theorem:

If only random effects are present in the resistors, the yield will be maximized for a given total area if $A_{RFB}=A_{RIN}$

Proof:

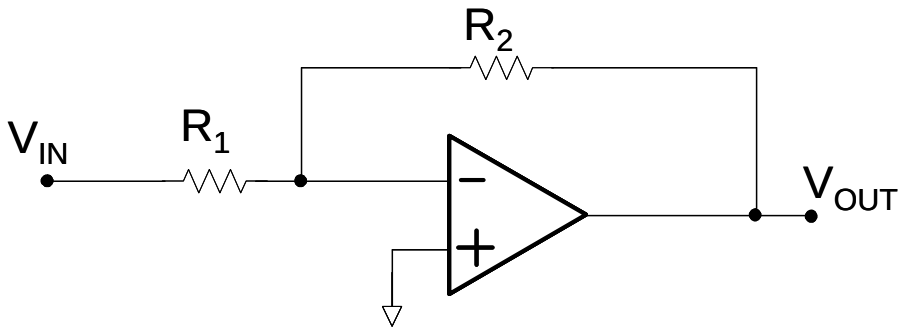

Define the gain ? by $$?=-\frac{R_2}{R_1}$$

R1 and R2 are random variables with nominal values R_{1N} and R_{2N}

T is a random variable with nominal value $?_N$

$$?=\frac{R_2}{R_1}=\frac{R_{2N}+R_{2R}}{R_{1N}+R_{1R}}=\left[\frac{R_{2N}}{R_{1N}}\right]\frac{1+\frac{R_{2R}}{R_{2N}}}{1+\frac{R_{1R}}{R_{1N}}}\approx ?_N\left(1+\frac{R_{2R}}{R_{2N}}-\frac{R_{1R}}{R_{1N}}\right)$$

$$? = \frac{R_2}{R_1} = \frac{R_{2N} + R_{2R}}{R_{1N} + R_{1R}} = \left[\frac{R_{2N}}{R_{1N}}\right] \frac{1 + \frac{R_{2R}}{R_{2N}}}{1 + \frac{R_{1R}}{R_{1N}}} \approx ?_N \left(1 + \frac{R_{2R}}{R_{2N}} - \frac{R_{1R}}{R_{1N}}\right)$$

$$s_?^2 = ?_N^2 \left(s^2_{\frac{R_{2R}}{R_{2N}}} + s^2_{\frac{R_{1R}}{R_{2N}}} \right)$$

For a resistor:

$$s_{\frac{R_{ran}}{R_N}} = \frac{A_?}{?_N \sqrt{WL}} = \frac{A_?}{?_N \sqrt{A_R}} = \frac{K_?}{\sqrt{A_R}}$$

$$s_? = K_? ?_N \sqrt{\frac{1}{A_{RA}} + \frac{1}{A_{RB}}} = K_? ?_N \sqrt{\frac{1}{A_{RA}} + \frac{1}{A_T - A_{RA}}}$$

Proof of Theorem

$$f = \frac{1}{A_{RA}} + \frac{1}{A_T - A_{RA}}$$

Minimizing the function under the square root wrt A_{RA} it follows that the optimal value for A_{RA} and A_{RB} are

$$A_{RA} = A_{RB} = \frac{A_T}{2}$$

This completes the proof of the theorem.

Feedback amplifiers

- Standard configurations
  - Conventional series

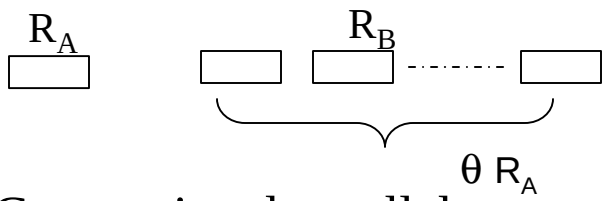

  - Conventional parallel

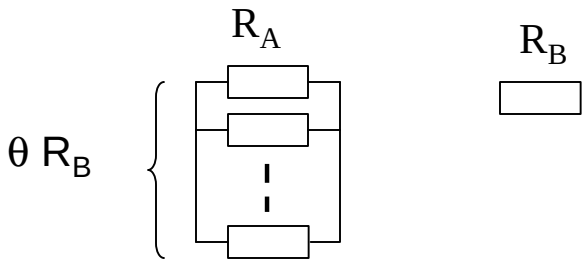

Assume gain = $-\theta$

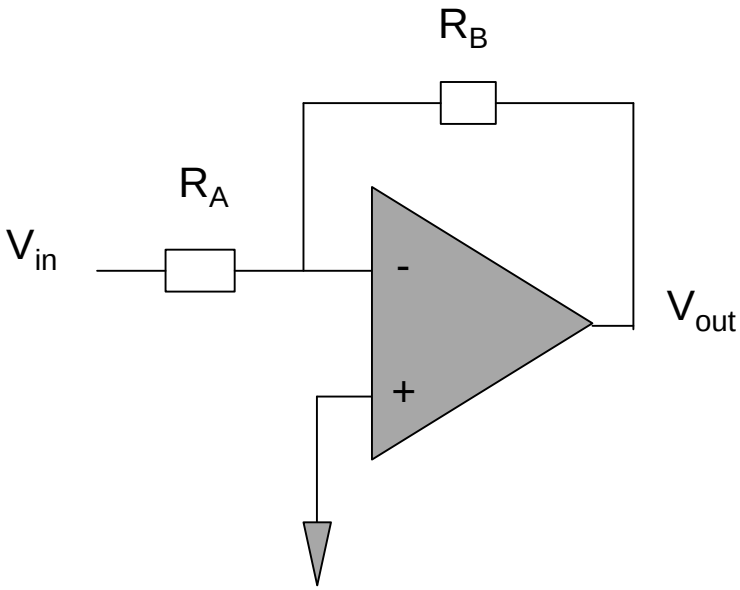

Feedback amplifiers

Question: What is the yield and how severe is the yield loss if the area is not optimally assigned?

- Define $A_{RB}/A_T = \gamma$

- The standard deviation of gain can be expressed in terms of γ by

$$s_{?} = \frac{2K_{?}?_{N}}{\sqrt{A_T}} \frac{1}{2\sqrt{?(1-?)}} = s_{?min} \frac{1}{2\sqrt{?(1-?)}}$$

Ideally γ=0.5

Simulation results

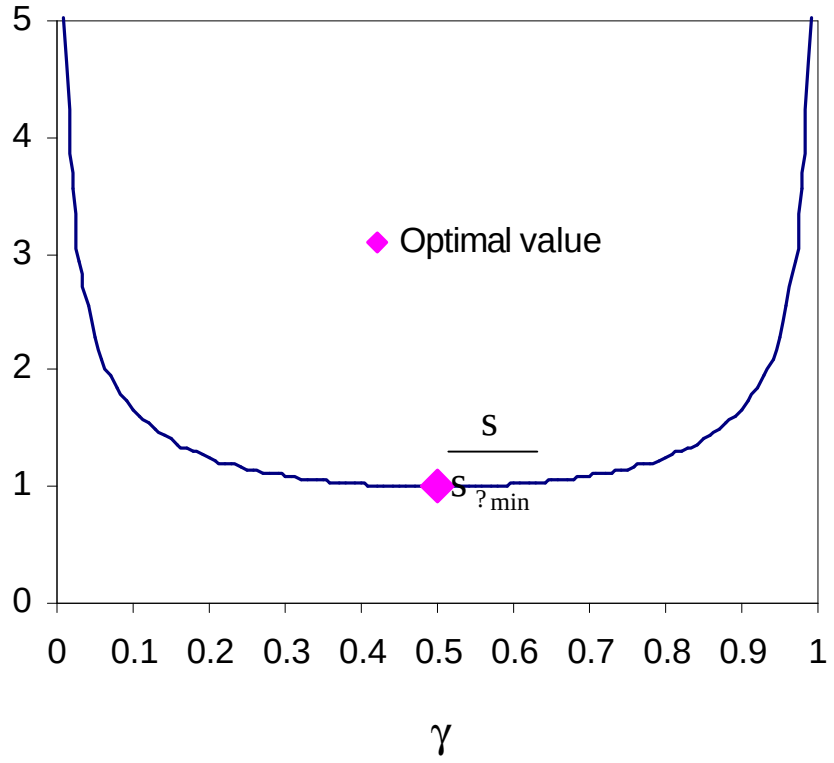

Minimum quite shallow but rises rapidly near extremes

Feedback amplifiers

- Yield

$$Y_A = 2F[(F^{-1}(\frac{1+Y_{opt}}{2}) * 2\sqrt{?(1-?)}] - 1$$

  - F is the standard CDF of a N(0,1) Gaussian Distribution
  - Y is the yield of optimal layout and Y_A is the corresponding actual yield with the same resistor areas

    i.e. $Y_A = Y_{opt}$ when $\gamma = 0.5$

- The optimal area-partitioned configuration may not be practical to realize
- A near-optimal configuration can be achieved

Near-optimal configuration example

- $\theta = 2$ (same total resistor area)

case1: γ=2/3

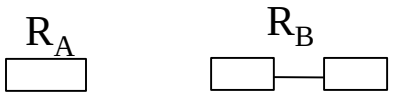

case2: γ=1/3

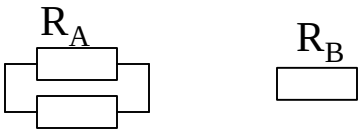

case3: γ=8/17

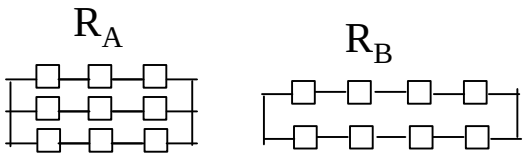

* Notice : spacing and edge effects can cause problem if unit cell is too *Small*!

γ

Yield

- Simulation Results

Gain	Optimal approach Yield	Conventional approach yield
5	99%	95%
10	99%	86%
25	99%	68%
100	99%	39%

- Total area for both approached is same
- Substantial yield improvement with proposed layout scheme

Outline

- Background
- Goal
- Yield enhanced layout strategies
  - Negative feedback amplifiers
  - R-2R ladders
  - R-string DACs
- Contact resistance modeling
- Conclusions

R-2R Current Steering DAC

Assume each bit slice has the same area

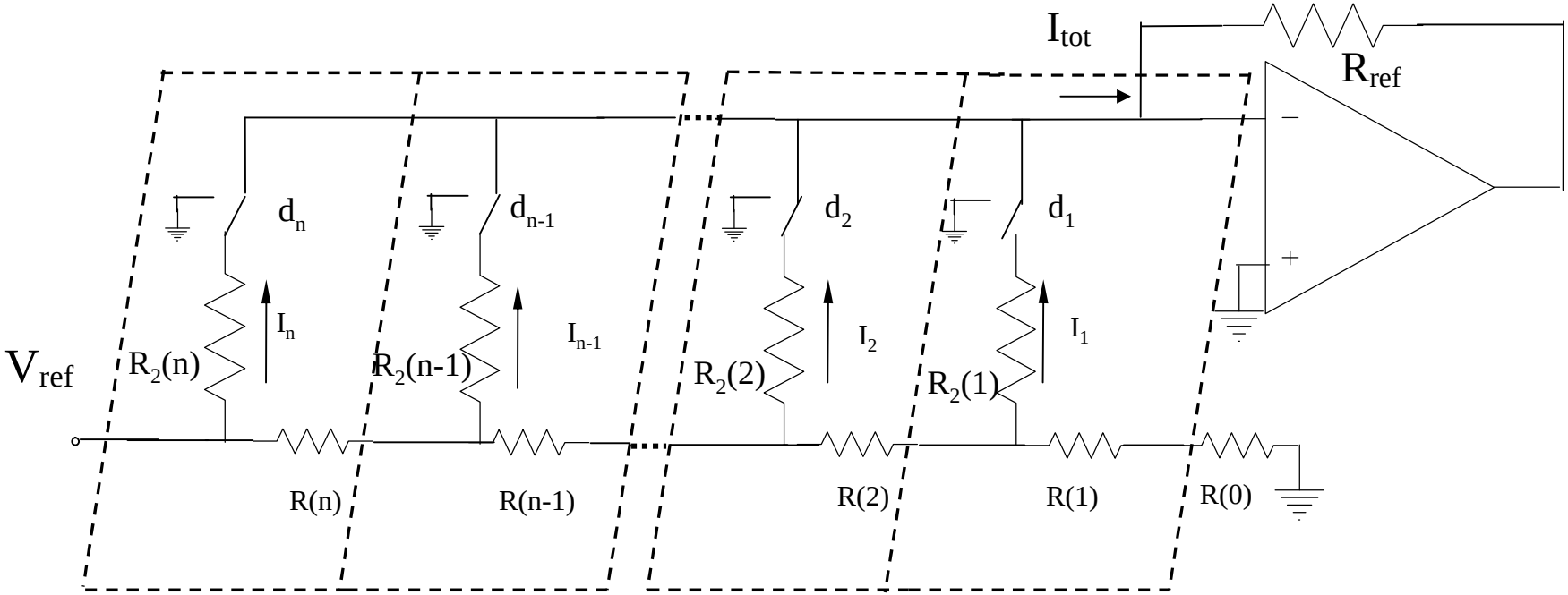

INL yield is not optimal!!

*

Two-parameter INL optimization

Slice to slice area allocation

$$\frac{A_k}{A_{k-1}} = m$$

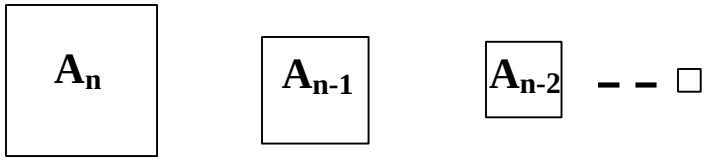

Internal slice area allocation

$$\frac{A_{2R}}{A_R} = k$$

Interested in optimizing the INL Yield

The probability density function of the INL is unwieldly making a complete closed-form analysis very difficult (maybe impossible)

Will attempt to address the problem by simulation initially using a two-parameter model for a 2n+1 variable problem

R-2R ladders

Two-parameter optimization

Slice to slice area allocation

$$\frac{A_k}{A_{k-1}} = m$$

Internal slice area allocation

$$\frac{A_{2R}}{A_R} = k$$

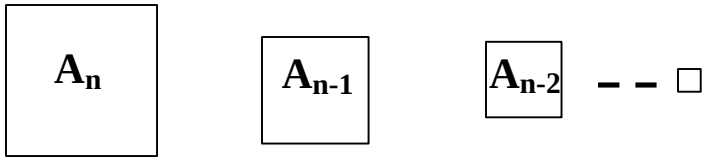

<u>Simulation supported conjecture:</u>

If only random effects are present in the resistors, the yield will be maximized for a given total area if

$m \approx 1.7$ and $k \approx 2.2$

Two-parameter optimization

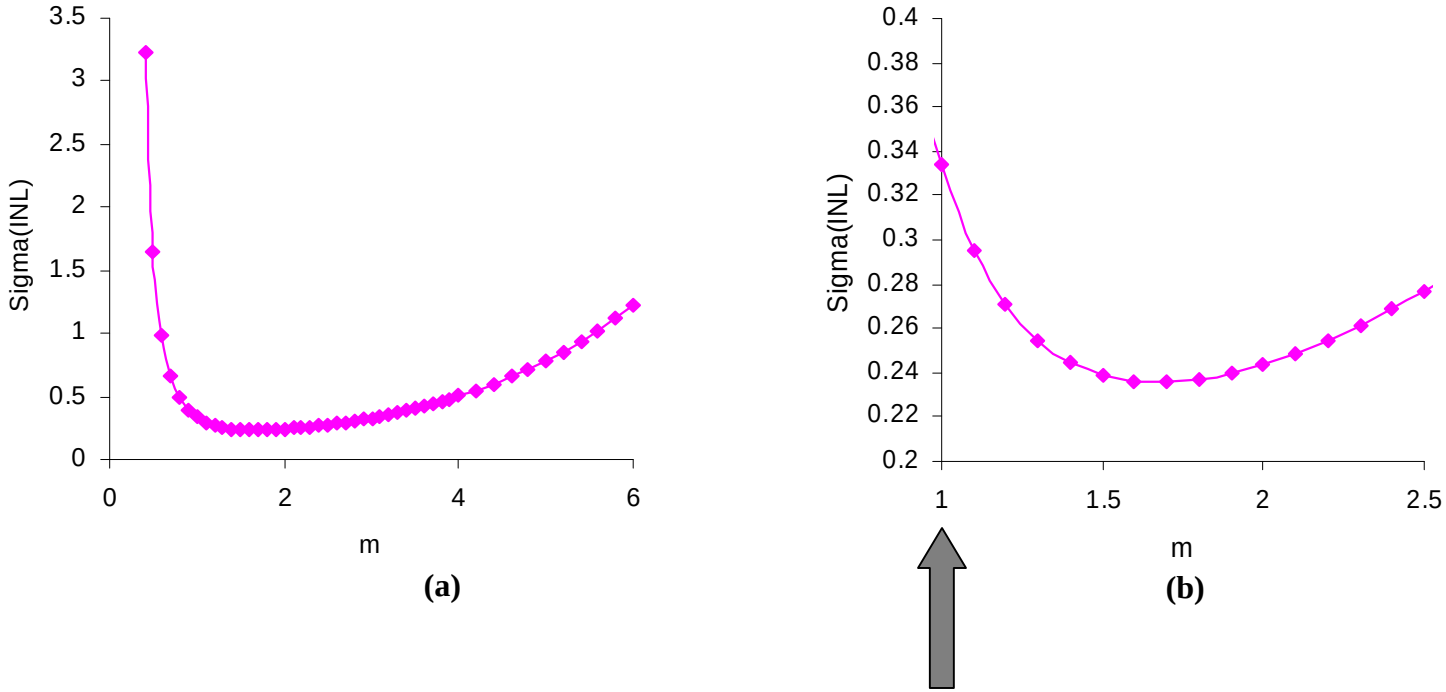

Standard deviation of INL vs. m for an 8-bit R-2R ladder with k = 2 a) coarse view (b) expanded view

The standard equal area per slice allocation is far from optimal !

Two-parameter optimization

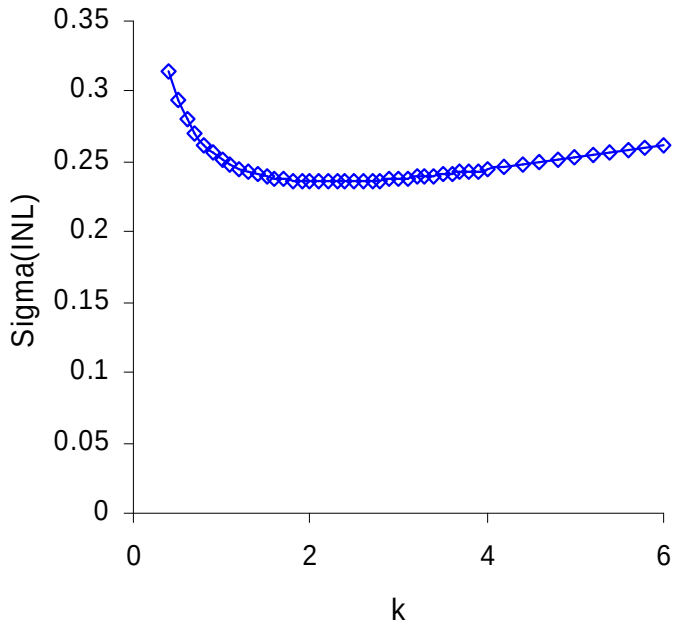

(a)

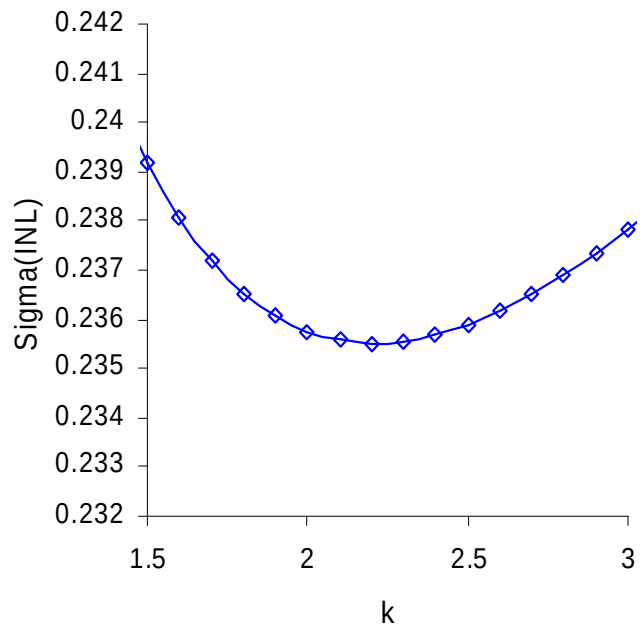

(b)

Standard deviation of INL vs. k for an 8-bit R-2R ladder with m=1.7
(a) coarse view (b) expanded view

The local minimum is quite shallow suggesting the standard series area allocation
Is near optimal but a significant yield penalty with a standard parallel area allocation

Yield Comparisons

Series: $A_{2R}=2A_R$
Parallel: $A_R=2A_{2R}$

- Simulation Results

n	Optimal approach Yield	Series approach Yield	Parallel approach Yield
10	99%	90.60%	82.10%
12	99%	87.00%	78.30%
14	99%	84.00%	75.70%
16	99%	82.00%	72.00%

- Total area for both approached is same
- Substantial yield improvement with proposed layout scheme

R-2R ladders

Three-parameter optimization

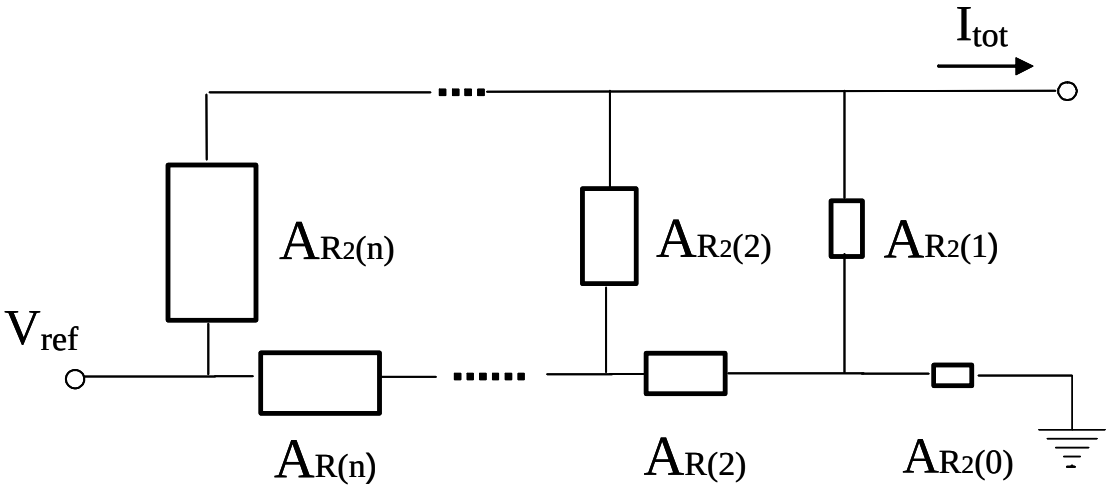

Three-parameter optimization

$$m_1 = \frac{A_{R2(k)}}{A_{R2(k-1)}} \quad for \quad n \le k \le 1$$

$$m_2 = \frac{A_{R(k)}}{A_{R(k-1)}} \quad for \quad n \le k \le 3$$

$$k_1 = \frac{\sum_{i=0}^{n} A_{R2(i)}}{\sum_{i=2}^{n} A_{R(i)}}$$

Simulation supported conjecture:

If only random effects are present in the resistors, the yield will be maximized for a given total area if

$m_1 \approx 1.7$

$m_2 \approx 1.7$

$k_1 \approx 2.2$

- Consistent with two-parameter optimization

Simplified optimization

- The Last LSB slices have the same total resistor area
  - Reduce the layout effort
  - The standard deviation of INL has minor degradation that is within 1% from the optimal value

Simplified optimization

- Simulation Results

n	s	σ_{INCR}
8	3	0.5445%
10	4	0.6819%
12	5	0.6445%
14	6	0.5302%
16	8	0.9915%

- s is the # of LSB slices with the same resistor area
- The first n-s+1 slices with m=1.7 and θ=2.2
- Near-optimal yield

Comparison with existing strategies

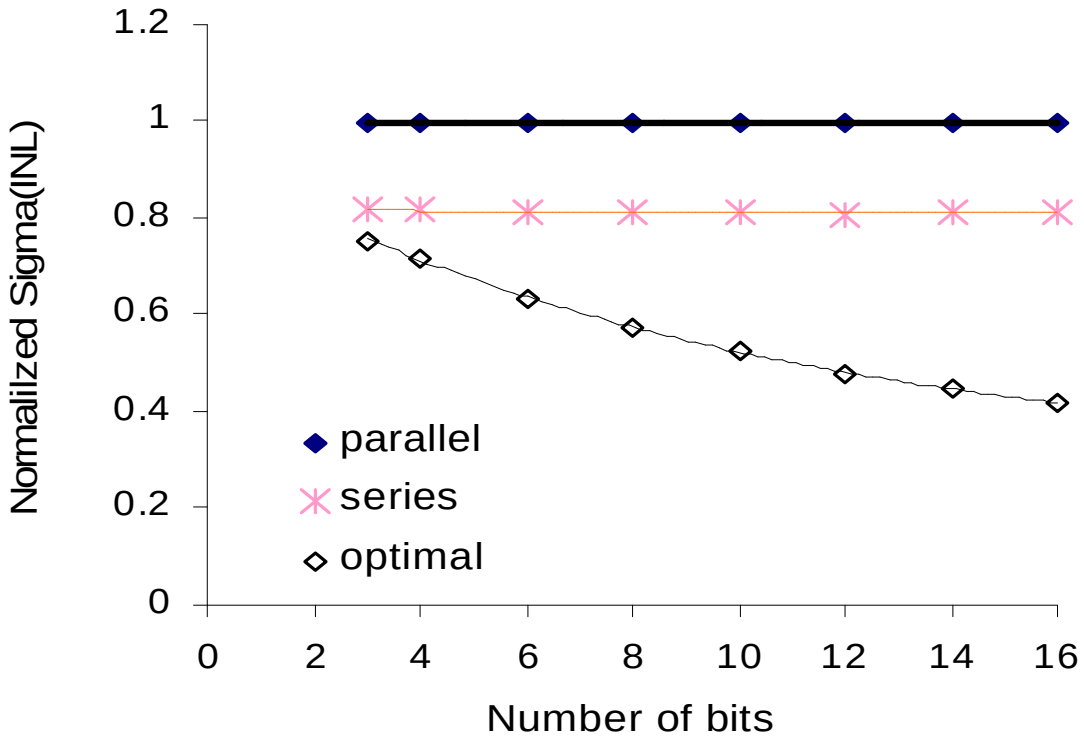

The normalized sigma INL of R-2R ladder vs. resolutions

Comparison of 3 optimization schemes

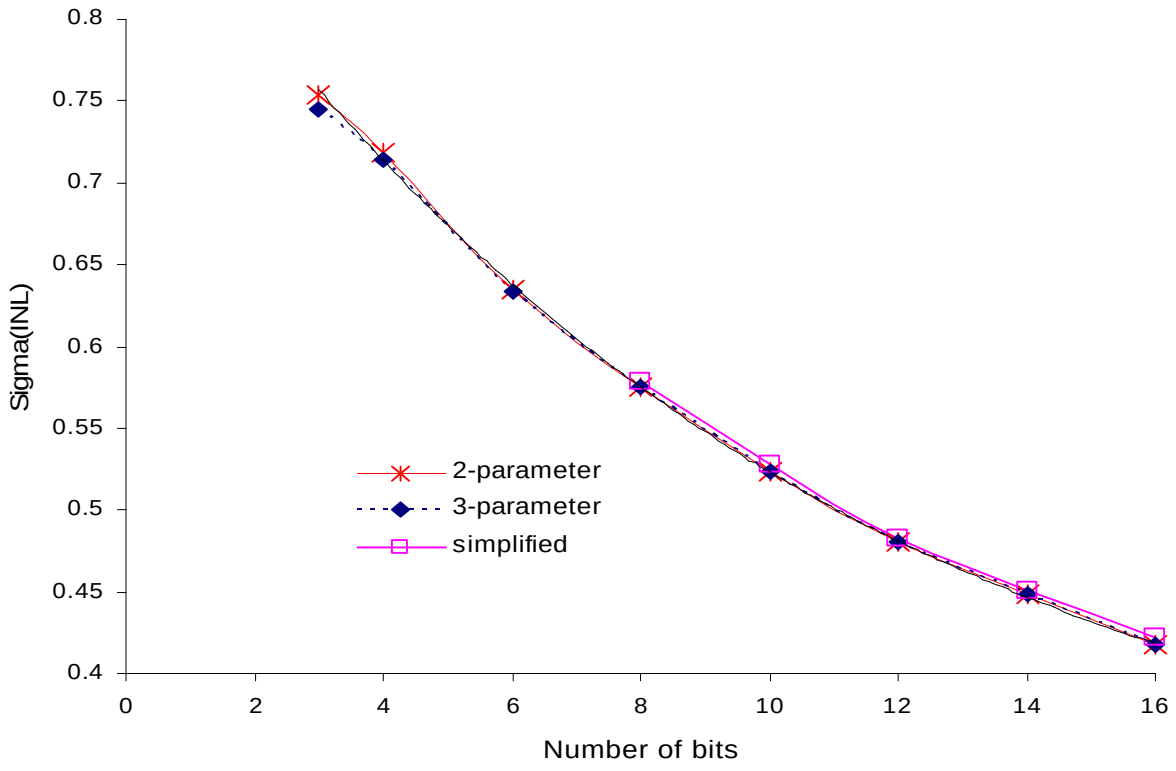

Yield Comparisons

Area allocated so optimal yield Is 99%

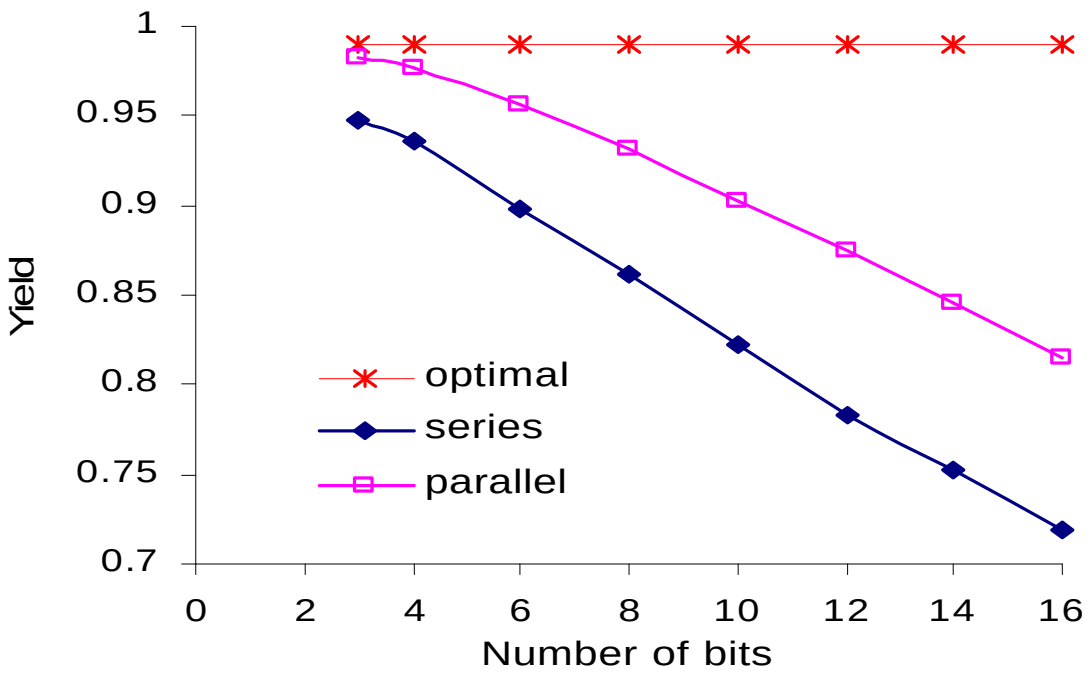

The yield of different area configuration of R-2R ladder vs. resolutions with same total resistor area

Practical realization example of simplified approach

- 8-bit R-2R ladder

	1	2	3	4	5	6	7	8
“R”	12×12	9×9	7×7	5×5	4×4	3×3	3×3	3×3
“2R”	24×12	18×9	14×7	10×5	8×4	6×3	6×3	6×3
m	1.78	1.65	1.96	1.56	1.78	1	0.75	
k	2	2	2	2	2	2	2	2

* m is the area ratio of the adjacent slices
* k is the area ratio of “2R” and “R” in the same slice

$$\sigma_{INCR}=0.9\ \%$$

R-2R Area Allocation Summary

- Significant yield improvements with allocating more area to MSB slices
- Allocating twice the area to the 2R resistors as to the R resistors is near optimal
- Allocating twice the area to the R resistors as to the 2R resistors will incur significant yield penalty
- MSB resistor slices can all have same area without significant yield penalty
- Segmentation and placement must still be used to mitigate gradient effects

Optimal area allocation in capacitor networks

- Observation: In SC and charge-redistribution circuits that have large capacitor ratios, the small capacitors will contribute much more to the over yield loss than the larger capacitors

- Observation: These effects in yield loss are much the same as they are for resistive networks

- Observation: In contrast to resistors in which the aspect ratio determines the component value, the area directly determines the capacitance value if no series connections are made

Optimal area allocation in capacitor networks

- Observation: If series capacitor connections are permitted, the standard deviation of small capacitors can be decreased if two larger capacitors are placed in series to form a smaller capacitor
- With the use of series connections, the results for optimizing area allocation presented for the amplifiers and R-2R networks can be directly extended to capacitor networks
- The major limitation in using this technique in capacitor networks (such as SC filters where large capacitor ratios are common) is concern about charge accumulation on any floating nodes and the effects of increased parasitics, particularly on the floating node

Outline

- Background
- Goal
- Yield enhanced layout strategies
  - Negative feedback amplifiers
  - R-2R ladders
  - R-string DACs
- Contact resistance modeling
- Conclusions

R-string DACs

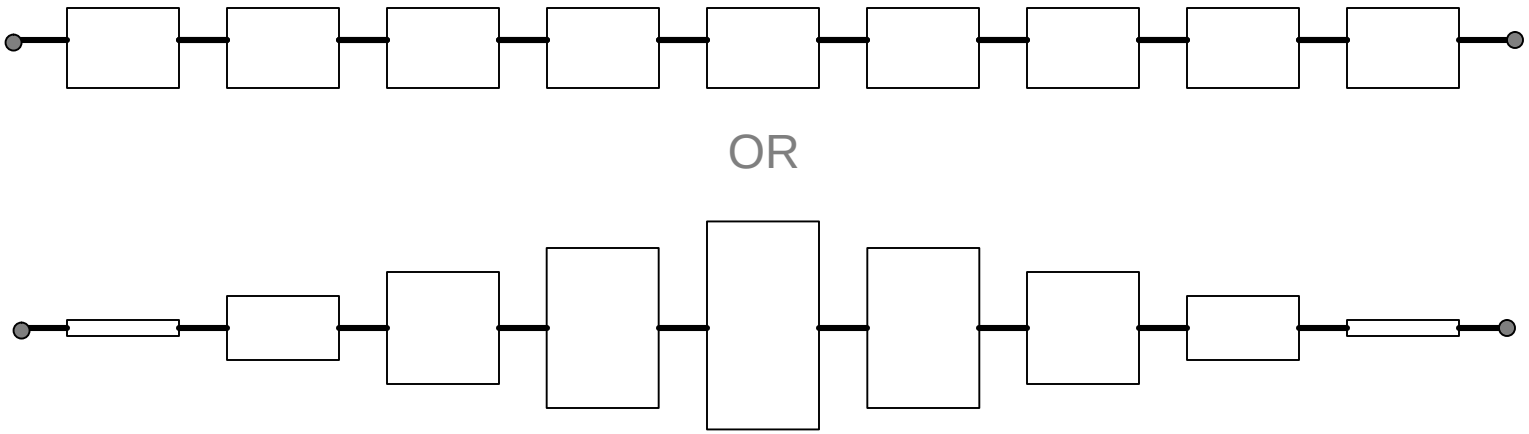

<u>Simulation supported conjecture:</u>

The conventional equal-area partitioning strategy appears to provide near optimal yield

Outline

- Background
- Goal
- Yield enhanced layout strategies
  - Negative feedback amplifiers
  - R-2R ladders
  - R-string DACs
- Contact resistance modeling
- Conclusions

Contact resistance modeling

- Contact resistance variations becoming dominant in small feature processes
- A model characterizing the effects of contact resistance is needed
- Example

Contacts

n=4

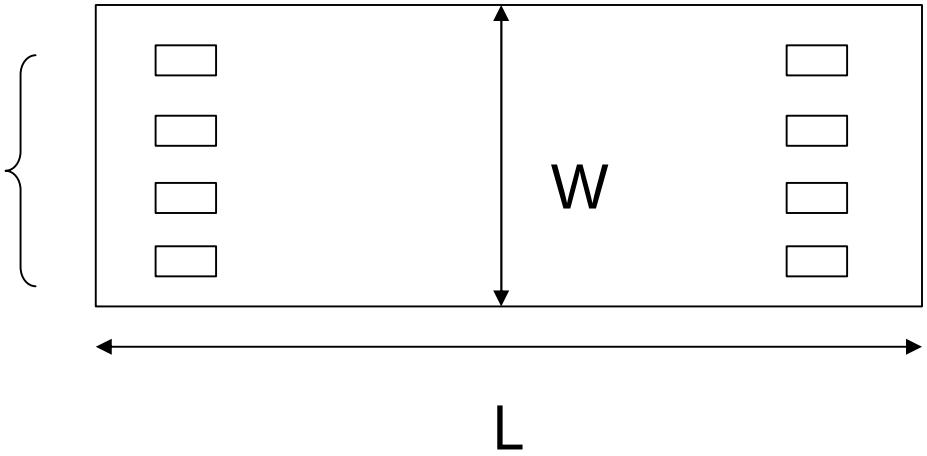

Contact resistance modeling

- Variation of resistance of an arbitrary resistor cell

Contact resistance contribution

Sheet Resistance contribution

$$s^2_{\frac{R_R}{R_N}} = \frac{\overbrace{\left(\frac{2R_{CN}^2}{n^3}\right) s^2_{\frac{R_{CR}}{R_{CN}}}}^{\text{Contact resistance contribution}} + \overbrace{R_{SHN}^2 \frac{A_?{}^2}{?_{NOM}^2 WL}}^{\text{Sheet Resistance contribution}}}{\left(2\frac{R_{CN}}{n} + R_{SHN}\right)^2}$$

Contact resistance modeling

- Assumptions
  - W is large
  - Contact pitch = 4λ
- Sheet/contact crossover

$$L_{cri} = 2^7 ?^3 \frac{R_{CN}^2}{A_?^2} s^2 \frac{R_{CR}}{R_{CN}}$$

  - $L > L_{cri}$, contact resistance variation dominates
  - $L < L_{cri}$, sheet resistance variation dominates

Optimal Area Allocation if Contact Resistance is Included

Question: If contact resistance dominates, are the previous area allocation results invalid?

It can be shown that if reference cells are used to build a resistor, then the previous problem can be reformulated to ask how many cells should be allocated to each of the resistors in the amplifiers, R-2R networks and R-strings.

With this observation, the number of cells plays exactly the same role in the yield calculations that the area did thus the **previous results still hold** If the ratios derived are based upon number of cells instead of diffusion area.

Management of contact resistance

- Contact resistance variations are a major problem and often play the dominant role in determining yield
- The issue of contact resistance management of optimization becomes one of designing optimal reference cells and is currently an open problem

Contact Resistance Modeling

- Statistics of random variations and gradient effects in contact resistance variations have not appeared in the literature
- Relevant contact resistance statistics for local matching are often not available for processes
- Contact resistance variations are becoming a major problem and a good statistical study of their characteristics is needed

Outline

- Background
- Goal
- Yield enhanced layout strategies
  - Negative feedback amplifiers
  - R-2R ladders
  - R-string DACs
- Contact resistance modeling
- Conclusions

Conclusions

- The proposed area allocation strategies significantly improve yield of feedback amplifiers when large component ratios are required and R-2R networks but segmentation is still required to manage gradient effects
- Model of combined effects of sheet resistance and contact resistance has been developed and contact/sheet variance crossover has been determined
- Results developed for sheet resistance also apply when both contact and sheet resistance variations are present

Acknowledgement

Most of the results included in this presentation come from the work of

Ms. Yu Lin, a Ph.D. student at Iowa State University